User's Manual

FDC-9300
Self-Tune Fuzzy / PID
Process / Temperature Controller

FUTUREDESIGN CONTROLS

CONTENTS

Page No

Chapter 1 Overview

1-1 Features ---------- 3
1-2 Ordering Code ---------- 4
1-3 Programming Port and DIP Switch ---------- 5
1-4 Keys and Displays ---------- 6
1-5 Menu Overview ---------- 7
1-6 Parameters Description ---------- 8

Chapter 2 Installation

2-1 Unpacking ---------- 15
2-2 Mounting ---------- 15
2-3 Wiring Precautions ---------- 16
2-4 Power Wiring ---------- 17
2-5 Sensor Installation Guidelines ---------- 17
2-6 Thermocouple Input Wiring ---------- 18
2-7 RTD Input Wiring ---------- 18
2-8 Linear DC Input Wiring ---------- 19
2-9 CT / Heater Current Input Wiring ---------- 19
2-10 Output 1 Wiring ---------- 20
2-11 Output 2 Wiring ---------- 21
2-12 Event Input Wiring ---------- 22
2-13 Alarm 1 Wiring ---------- 22
2-14 Alarm 2 Wiring ---------- 22
2-15 RS-485 ---------- 23
2-16 Analog Retransmission ---------- 23
2-17 RS-232 ---------- 24

Chapter 3 Programming Special Functions

3-1 Rearrange User Menu ---------- 25
3-2 Dwell Timer ---------- 26
3-3 Manual Control ---------- 26
3-4 Failure Transfer ---------- 27
3-5 Signal Conditioner DC Power Supply ---------- 27
3-6 Bumpless Transfer ---------- 28
3-7 Self-Tuning ---------- 29
3-8 Auto-Tuning ---------- 30
3-9 Manual Tuning ---------- 32
3-10 Pump Control ---------- 35
3-11 Sleep Mode ---------- 36
3-12 Remote Lockout ---------- 36
3-13 Heater Break ---------- 37
3-14 Reload Default Parameters ---------- 37

Chapter 4 Calibration ---------- 38

Chapter 5 Error Codes and Troubleshooting ---------- 42

Chapter 6 Specifications ---------- 45

Appendix

A-1 Menu Existence / Your Settings ---------- 48
A-2 Warranty ---------- 51

Chapter 1 Overview

1 – 1 Features

****Unique**
***Valuable**

****** Two function complexity levels
****** User menu configurable –
****** Adaptive heat-cool High accuracy 18-bit input A
****** High accuracy 15-bit output D A
****** Fast input sample rate (5 times / second)
****** dead band
****** Pump control
***** Fuzzy + PID microprocessor-based control
***** Automatic programming
***** Differential control
***** Auto-tune function
***** Self-tune function
***** Sleep mode function
***** EMC / CE EN50081-1 & EN50082-2
***** Front panel sealed to NEMA 4X & IP65

***** " Soft-start " ramp and dwell timer
***** Programmable inputs(thermocouple, RTD, mA, VDC)
***** Analog input for remote set point and CT
***** Event input for changing function & set point
***** Programmable digital filter
***** Hardware lockout + remote lockout protection
***** Loop break alarm
***** Heater break alarm
***** Sensor break alarm + Bumpless transfer
***** RS-485, RS-232 communication
***** Analog retransmission
***** Signal conditioner DC power supply
***** A wide variety of output modules available
***** Approvals UR / CSA / CE / RHoS Compliant

FDC-9300 Fuzzy Logic plus PID microprocessor-based controller, incorporates a bright, easy to read 4-digit LED display, indicating process value. The **Fuzzy Logic** technology enables a process to reach a predetermined set point in the shortest time, with the minimum of overshoot during power-up or external load disturbance. The units are housed in a 1/16 DIN case, measuring 48 mm x 48 mm with 75 mm behind panel depth. The units feature three touch keys to select the various control and input parameters. Using a unique function, you can put at most 5 parameters in front of user menu by using **SEL1 to SEL5** contained in the setup menu. This is particularly useful to OEM's as it is easy to configure menu to suit the specific application.

FDC-9300 is powered by 11-28 or 90 - 264 VDC / AC supply, incorporating a 2 amp. control relay as standard. Up to two additional optional relay outputs can be supported. Output two can be a cooling relay or alarm or dwell timer.The third relay performs as a programmable alarm. Alternative output options include SSR Drive, Triac, 0/4 - 20 mA and 0 - 10 volts. FDC-9300 is fully programmable for PT100, thermocouple types J, K, T, E, B, R, S, C, P, 0 - 20mA, 4 -20mA and voltage signal input, with no need to modify the unit. The input signals are digitized by using a **18-bit A to D** converter. Its **fast sampling rate** allows the FDC-9300 to control fast processes such as pressure and flow. **Self tune** is incorporated. The self- tune can be used to optimize the control parameters as soon as undesired control result is observed. Unlike auto-tune, Self-tune will produce less disturbance to the process during tuning, and can be used any time.

The function of Fuzzy Logic is to adjust PID parameters internally in order to make manipulation output value MV more flexible and adaptive to various processes.

PID + Fuzzy Control has been proven to be an efficient method to improve the control stability as shown by the comparison curves below:

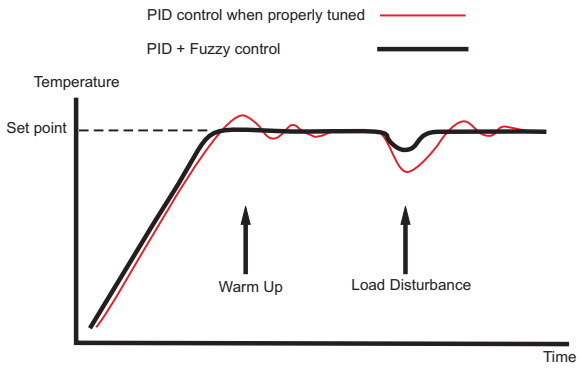

Figure 1.1 Fuzzy PID Enhances Control Stability

1– 2 Ordering Code

FDC-9300-□ □ □ □ □ □

Power Input — 1

4: 90 - 264 VAC, 50/60 HZ
5: 11 - 26 VAC or VDC
9: Special Order

Signal Input — 2

1: Standard Input
Input 1 - Universal Input
Thermocouple: J, K, T, E, B, R, S, N, L
RTD: PT100 DIN, PT100 JIS
Current: 4 - 20mA, 0 - 20 mA.
Voltage: 0 - 1V, 0 - 5V, 1 - 5V, 0 - 10V
Input 2 - CT and Analog Input***
CT: 0 - 50 Amp. AC Current Transformer
Analog Input: 4 - 20 mA, 0 - 20mA, 0 - 1V, 0 - 5V, 1 - 5V, 0 - 10V.
Input 3 - Event Input (EI)**
9: Special Order

Output 1 — 3

0: None
1: Relay rated 2A/240VAC
2: Pulsed voltage to drive SSR, 5VDC@30mA
3: 4 - 20mA / 0 - 20mA* Isolated 500 ohm load max.
4: 1 - 5V / 0 - 5V Isolated * Min impedance 10K
5: 0 - 10V Isolated Min. Impedance 10K
6: Triac Output 1A / 240VAC,SSR
C: Pulsed voltage to drive SSR, 14VDC@40ma
9: Special order

Output 2 / Alarm 2 — 4

0: None
1: Form A Relay 2A/240VAC
2: Pulsed voltage to drive SSR, 5V / 30mA
3: 4 - 20mA / 0 - 20mA Isolated * 500 ohm load Max
4: 1 - 5V / 0 - 5V Isolated* Min impedance 10K
5: 0 - 10V Isolated Min impedance 10K
6: Triac Output, 1A / 240VAC, SSR
7: 20V / 25mA DC Isolated Output Power Supply
8: 12V / 40 mA DC Isolated Output Power Supply
9: 5V / 80mA DC Isolated Output Power Supply
C: Pulsed voltage to drive SSR, 14VDC @ 40ma
A: Special order

Alarm 1 — 5

0: None
1: Form A Relay 2A / 240VAC
2: Form B Relay 2A / 240VAC
9: Special order

Communications — 6

0: None
1: RS-485
2: RS-232 **
3: Retransmit 4-20mA/0-20mA*
4: Retransmit 1 - 5V / 0 - 5V*
5: Retransmit 0 - 10V
9: Special order

Example

Standard Model:
FDC-9300-411111
- 90 - 264 operating voltage
- Input: Standard Input
- Output 1: Relay
- Output 2: Relay
- Alarm 1: Form A Relay
- RS- 485 Communication Interface

Accessories

CT94-1 = 0 - 50 Amp. AC Current Transformer
OM95-3 = Isolated 4 - 20 mA / 0 - 20 mA Analog Output Module
OM95-4 = Isolated 1 - 5V / 0 - 5V Analog Output Module
OM95-5 = Isolated 0 - 10V Analog Output Module
OM94-6 = Isolated 1A / 240VAC Triac Output Module (SSR)
DC94-1 = Isolated 20V / 25mA DC Output Power Supply
DC94-2 = Isolated 12V / 40mA DC Output Power Supply
DC94-3 = Isolated 5V / 80mA DC Output Power Supply
CM94-1 = Isolated RS-485 Interface Module
CM94-2 = Isolated RS-232 Interface Module
CM94-3 = Isolated 4 - 20 mA / 0 - 20 mA Retransmission Module
CM94-4 = Isolated 1 - 5V / 0 - 5V Retransmission Module
CM94-5 = Isolated 0 - 10V Retransmission Module
CC94-1 = RS-232 Interface Cable (2M)
UM9300 2.0 = FDC-9300 User's Manual

* Range set by front keyboard
** Alternative between RS-232 and EI
*** Need to order an accessory CT94-1 if Heater Break detection is required.

Related Products

SNA10A = Smart Network Adaptor for Third Party Software, Converts 255 channels of RS-485 or RS-422 to RS-232 Network

1– 3 Programming Port and DIP Switch

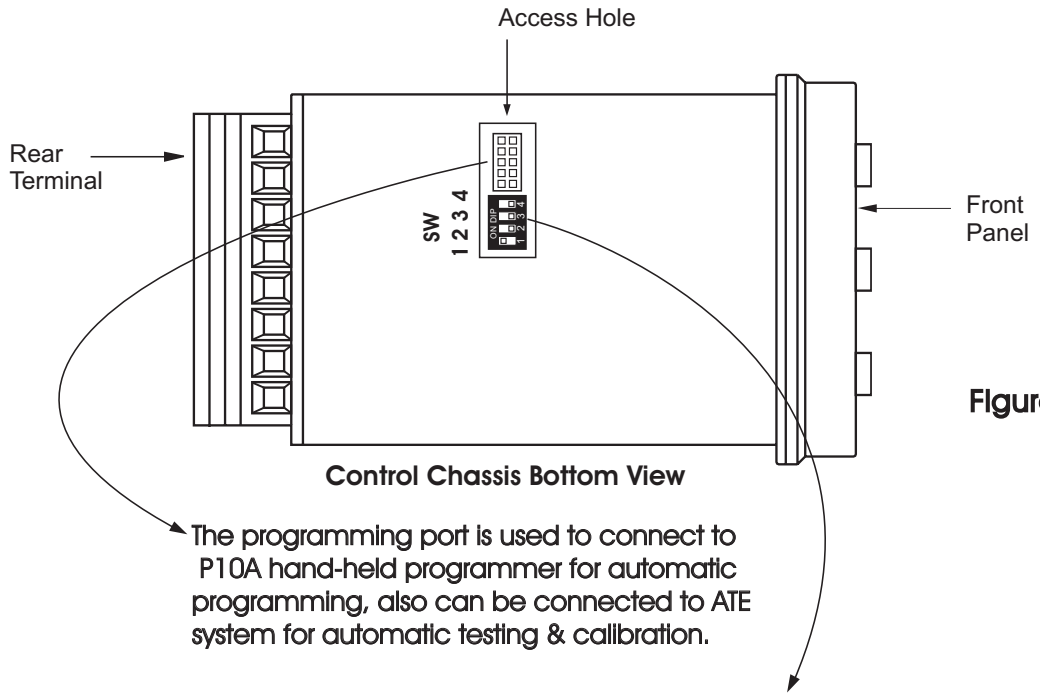

Figure 1.2 Access Hole Overview

		DIP Switch ■:ON □:OFF			
		1	2	3	4
Input 1 Select	TC, RTD, mV	■	□		
	0-1V, 0-5V, 1-5V, 0-10V	□	■		
	0-20 mA, 4-20 mA	■	■		
Lockout	All parameters are Unlocked			□	□
	Only SP1, SEL1–SEL5* are unlocked			■	□
	Only SP1 is unlocked			□	■
	All Parameters are locked			■	■
Factory Default Setting		■	□	□	□

Table 1.1 DIP Switch Configuration

The programming port is used for off-line automatic setup and testing procedures only. Don't attempt to make any connection to these pins when the unit is used for a normal control purpose.

When the unit leaves the factory, the DIP switch is set so that TC & RTD are selected for input 1 and all parameters are unlocked.

Lockout function is used to disable the adjustment of parameters as well as operation of calibration mode. However, the menu can still be viewed even under lockout

* SEL1- SEL5 represent those parameters which are selected by using SEL1, SEL2,...SEL5 parameters contained in Setup menu. Parameters been selected are then allocated at the beginning of the user menu.

1– 4 Keys and Displays

The unit is programmed by using three keys on the front panel. The available key functions are listed in following table.

Table 1.2 Keypad Operation

TOUCHKEYS	FUNCTION	DESCRIPTION
⩓	Up Key	Press and release quickly to increase the value of parameter. Press and hold to accelerate increment speed.
⩔	Down Key	Press and release quickly to decrease the value of parameter. Press and hold to accelerate decrement speed.
⟲	Scroll Key	Select the parameter in a direct sequence.
Press ⟲ for at least 3 seconds	Enter Key	Allow access to more parameters on user menu, also used to Enter manual mode, auto-tune mode, default setting mode and to save calibration data during calibration procedure.
Press ⟲ for at least 6 seconds	Start Record Key	Reset historical values of PVHI and PVLO and start to record the peak process value.
Press ⟲ ⩓	Reverse Scroll Key	Select the parameter in a reverse sequence during menu scrolling.
Press ⟲ ⩔	Mode Key	Select the operation Mode in sequence.
Press ⩓ ⩔	Reset Key	Reset the front panel display to a normal display mode, also used to leave the specific Mode execution to end up the auto-tune and manual control execution, and to quit the sleep mode.
Press ⩓ ⩔ for at least 3 seconds	Sleep Key	The controller enters the sleep mode if the sleep function (SLEP) is enabled (select YES).
Press ⟲ ⩓ ⩔	Factory Key	By entering correct security code to allow execution of engineering programs. This function is used only at the factory to manage the diagnostic reports. The user should never attempt to operate this function.

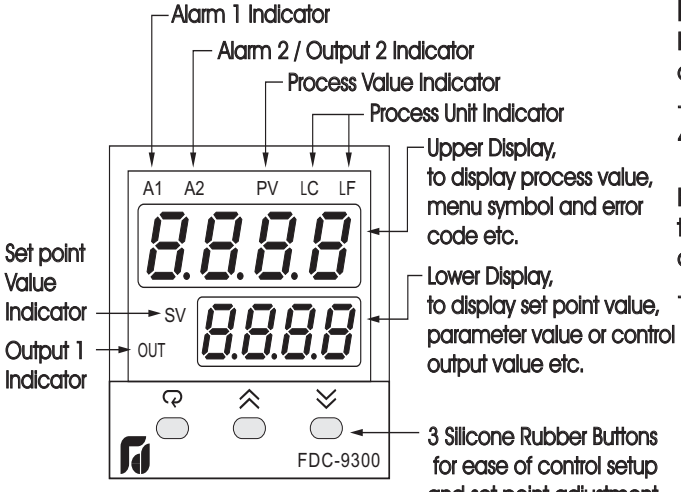

Figure 1.4 Front Panel Description

How to display a 5-digit number ?

For a number with decimal point the display will be shifted one digit right:
-199.99 will be displayed by -199.9
4553.6 will be displayed by 4553

For a number without decimal point the display will be divided into two alternating phases:
-19999 will be displayed by:

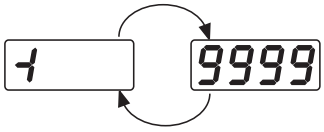

45536 will be displayed by:

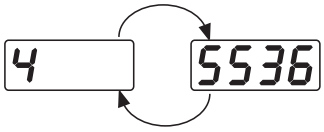

-9999 will be displayed by:

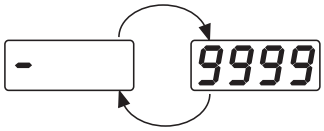

Power On Sequence

1.) Display segments OFF for 0.5 secs.
2.) Display segments ON for 2.0 secs
3.) Display Program Code for 2.5 secs
4.) Display Date Code for 1.25 secs.
5.) Display S/N for 1.25 secs

Program Code

Date Code

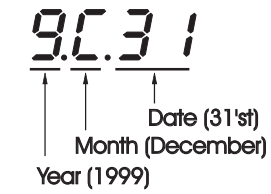

Table 1.3 Display Form of Characters

A	A	E	E	I	I	N	n	S	S	X	
B	b	F	F	J	J	O	o	T	t	Y	y
C	C	G	G	K	K	P	P	U	u	Z	
c	c	H	H	L	L	Q		V	v	?	?
D	d	h	h	M	M	R	r	W		=	=

◤: Confused Character

1– 5 Menu Overview

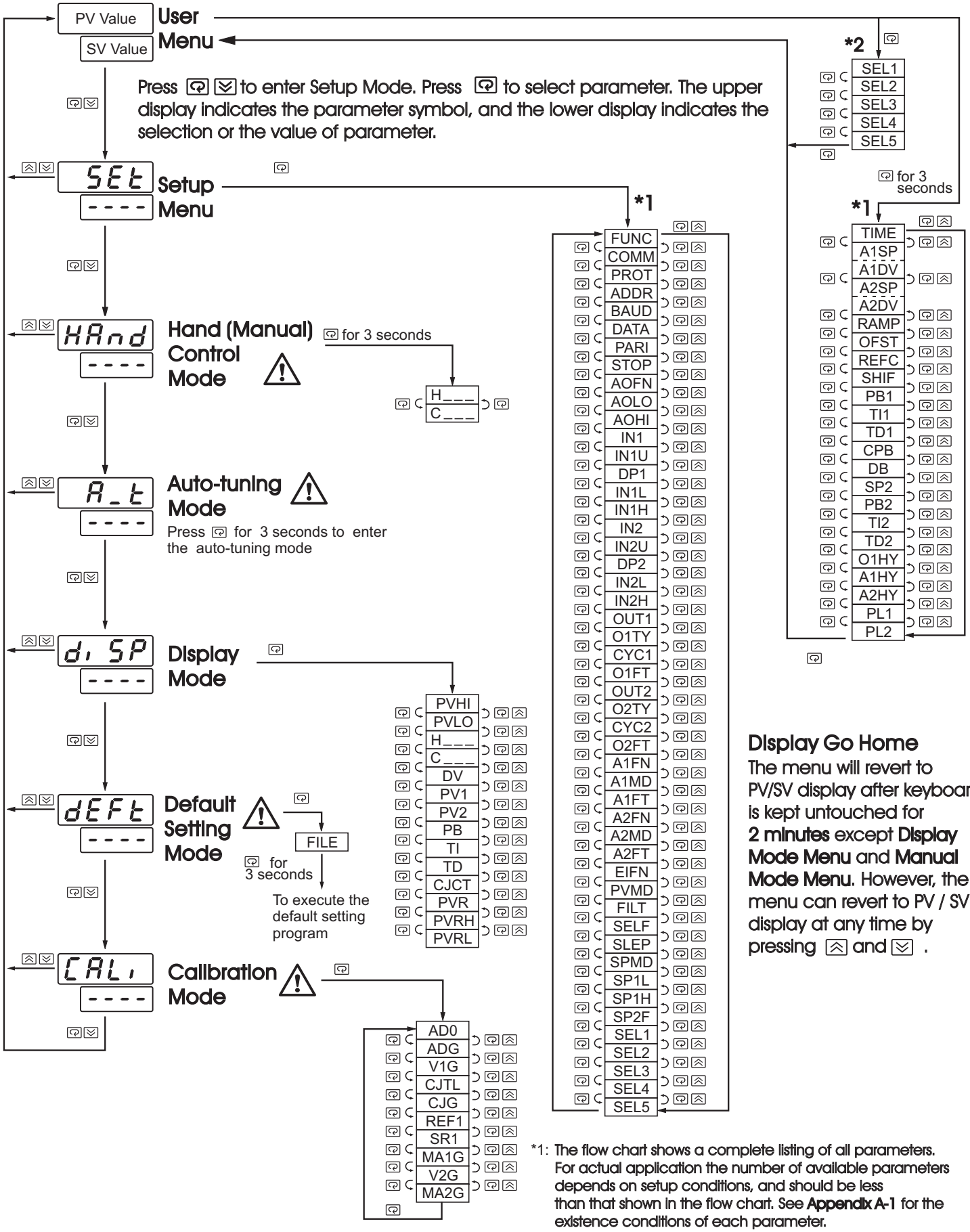

Display Go Home

The menu will revert to PV/SV display after keyboard is kept untouched for **2 minutes** except **Display Mode Menu** and **Manual Mode Menu**. However, the menu can revert to PV / SV display at any time by pressing and .

*1: The flow chart shows a complete listing of all parameters. For actual application the number of available parameters depends on setup conditions, and should be less than that shown in the flow chart. See **Appendix A-1** for the existence conditions of each parameter.

*2: You can select at most 5 parameters put in front of the user menu by using SEL1 to SEL5 contained at the bottom of setup menu.

Apply these modes will break the control loop and change some of the previous setting data. Make sure that if the system is allowable to use these modes.

1–6 Parameter Description

Table 1.4 Parameter Description

Contained In	Basic Function	Parameter Notation	Display Format	Parameter Description	Range	Default Value
User Menu	✓	SP1		Set point 1	Low: SP1L High: SP1H	100.0 C (212.0 F)
	✓	TIME	t1 nE	Dwell Time	Low: 0 High: 6553.5 minutes	0.0
	✓	A1SP	A1SP	Alarm 1 Set point	See Table 1.5, 1.6	100.0 C (212.0 F)
	✓	A1DV	A1dV	Alarm 1 Deviation Value	Low: -200.0 C (-360.0 F) High: 200.0 C (360.0 F)	10.0 C (18.0 F)
	✓	A2SP	A2SP	Alarm 2 Set point	See Table 1.5, 1.7	100.0 C (212.0 F)
	✓	A2DV	A2dV	Alarm 2 Deviation Value	Low: -200.0 C (-360.0 F) High: 200.0 C (360.0 F)	10.0 C (18.0 F)
		RAMP	rAnP	Ramp Rate	Low: 0 High: 500.0 C (900.0 F)	0.0
	✓	OFST	oFSt	Offset Value for P control	Low: 0 High: 100.0 %	25.0
		REFC	rEFC	Reference Constant for Specific Function	Low: 0 High: 60	2
	✓	SHIF	SHIF	PV1 Shift (offset) Value	Low: -200.0 C (-360.0 F) High: 200.0 C (360.0 F)	0.0
	✓	PB1	Pb1	Proportional Band 1 Value	Low: 0 High: 500.0 C (900.0 F)	10.0 C (18.0 F)
	✓	TI1	t1 1	Integral Time 1 Value	Low: 0 High: 1000 sec	100
	✓	TD1	td1	Derivative Time 1 Value	Low: 0 High: 360.0 sec	25.0
	✓	CPB	CPb	Cooling Proportional Band Value	Low: 1 High: 255 %	100
	✓	DB	db	Heating-Cooling Dead Band Negative Value= Overlap	Low: -36.0 High: 36.0%	0
		SP2	SP2	Set point 2	See Table 1.5, 1.8	37.8 C (100.0 F)
		PB2	Pb2	Proportional Band 2 Value	Low: 0 High: 500.0 C (900.0 F)	10.0 C (18.0 F)
		TI2	t1 2	Integral Time 2 Value	Low: 0 High: 1000 sec	100
		TD2	td2	Derivative Time 2 Value	Low: 0 High: 360.0 sec	25.0
	✓	O1HY	o1HY	Output 1 ON-OFF Control Hysteresis	Low: 0.1 High: 55.6 C (100.0 F)	0.1
	✓	A1HY	A1HY	Hysteresis Control of Alarm 1	Low: 0.1 High: 10.0 C (18.0 F)	0.1
	✓	A2HY	A2HY	Hysteresis Control of Alarm 2	Low: 0.1 High: 10.0 C (18.0 F)	0.1
		PL1	PL 1	Output 1 Power Limit	Low: 0 High: 100 %	100
		PL2	PL2	Output 2 Power Limit	Low: 0 High: 100 %	100
Setup Menu	✓	FUNC	FunC	Function Complexity Level	0 bASC : Basic Function Mode 1 FuLL : Full Function Mode	1
		COMM	Conn	Communication Interface Type	0 nonE : No communication function 1 485 : RS-485 interface 2 232 : RS-232 interface 3 4-20 : 4 - 20 mA analog retransmission output 4 0-20 : 0 - 20 mA analog retransmission output 5 0-1V : 0 - 1V analog retransmission output 6 0-5V : 0 - 5V analog retransmission output 7 1-5V : 1 - 5V analog retransmission output 8 0-10 : 0 - 10V analog retransmission output	1
		PROT	Prot	COMM Protocol Selection	0 rtu : Modbus protocol RTU mode	0

Table 1.6 Parameter Description (continued 2/7)

Contained in	Basic Function	Parameter Notation	Display Format	Parameter Description	Range	Default Value
Setup Menu		ADDR	Addr	Address Assignment of Digital COMM	Low: 1 High: 255	—
		BAUD	bAud	Baud Rate of Digital COMM	0 0.3: 0.3 Kbits/s baud rate 1 0.6: 0.6 Kbits/s baud rate 2 1.2: 1.2 Kbits/s baud rate 3 2.4: 2.4 Kbits/s baud rate 4 4.8: 4.8 Kbits/s baud rate 5 9.6: 9.6 Kbits/s baud rate 6 14.4: 14.4 Kbits/s baud rate 7 19.2: 19.2 Kbits/s baud rate 8 28.8: 28.8 Kbits/s baud rate 9 38.4: 38.4 Kbits/s baud rate	5
		DATA	dAtA	Data Bit count of Digital COMM	0 7bit: 7 data bits 1 8bit: 8 data bits	1
		PARI	PAri	Parity Bit of Digital COMM	0 EvEn: Even parity 1 odd: Odd parity 2 nonE: No parity bit	0
		STOP	StoP	Stop Bit Count of Digital COMM	0 1bit: One stop bit 1 2bit: Two stop bits	0
		AOFN	AoFn	Analog Output Function	0 Pv1: Retransmit IN1 process value 1 Pv2: Retransmit IN2 process value 2 P1-2: Retransmit IN1 −IN2 difference process value 3 P2-1: Retransmit IN2 −IN1 difference process value 4 Sv: Retransmit set point value 5 nv1: Retransmit output 1 manipulation value 6 nv2: Retransmit output 2 manipulation value 7 dv: Retransmit deviation(PV-SV) Value	0
		AOLO	AoLo	Analog Output Low Scale Value	Low: -19999 High: 45536	0 C (32.0 F)
		AOHI	AoHi	Analog Output High Scale Value	Low: -19999 High: 45536	100.0 C (212.0 F)
	✓	IN1	in1	IN1 Sensor Type Selection	0 J_tC: J type thermocouple 1 K_tC: K type thermocouple 2 t_tC: T type thermocouple 3 E_tC: E type thermocouple 4 b_tC: B type thermocouple 5 r_tC: R type thermocouple 6 S-tC: S type thermocouple	1 (0)

Table 1.6 Parameter Description (continued 3/7)

Contained in	Basic Function	Parameter Notation	Display Format	Parameter Description	Range	Default Value
Setup Menu	✓	IN1	in1	IN1 Sensor Type Selection	7 C_tC: C type thermocouple 8 P_tC: P type thermocouple 9 Pt.dn: PT 100 ohms DIN curve 10 Pt.JS: PT 100 ohms JIS curve 11 4-20: 4 - 20 mA linear current input 12 0-20: 0 - 20 mA linear current input 13 0- 1V: 0 - 1V linear Voltage input 14 0-5V: 0 - 5V linear Voltage input 15 1-5V: 1 - 5V linear Voltage input 16 0- 10: 0 - 10V linear Voltage input 17 SPEC: Special defined sensor curve	1 (0)
	✓	IN1U	in1u	IN1 Unit Selection	0 °C: Degree C unit 1 °F: Degree F unit 2 Pu: Process unit	0 (1)
	✓	DP1	dP1	IN1 Decimal Point Selection	0 no.dP: No decimal point 1 1-dP: 1 decimal digit 2 2-dP: 2 decimal digits 3 3-dP: 3 decimal digits	1
	✓	IN1L	in1L	IN1 Low Scale Value	Low: -19999 High: 45536	0
	✓	IN1H	in1H	IN1 High Scale Value	Low: -19999 High: 45536	1000
		IN2	in2	IN2 Signal Type Selection	0 nonE: IN2 no function 1 Ct: Current transformer input 2 4-20: 4 - 20 mA linear current input 3 0-20: 0 - 20 mA linear current input 4 0- 1V: 0 - 1V linear voltage input 5 0-5V: 0 - 5V linear voltage input 6 1-5V: 1 - 5V linear voltage input 7 0- 10: 0 - 10V linear voltage input	1
		IN2U	in2u	IN2 Unit Selection	Same as IN1U	2
		DP2	dP2	IN2 Decimal Point Selection	Same as DP1	1
		IN2L	in2L	IN2 Low Scale Value	Low: -19999 High: 45536	0
		IN2H	in2H	IN2 High Scale Value	Low: -19999 High: 45536	1000
	✓	OUT1	out1	Output 1 Function	0 rEVr: Reverse (heating) control action 1 dirt: Direct (cooling) control action	0
	✓	O1TY	o1tY	Output 1 Signal Type	0 rELY: Relay output 1 SSrd: Solid state relay drive output 2 SSr: Solid state relay output 3 4-20: 4 - 20 mA current module	0

Table 1.6 Parameter Description (continued 4/7)

Contained in	Basic Function	Parameter Notation	Display Format	Parameter Description	Range	Default Value
Setup Menu	✓	O1TY	o1tY	Output 1 Signal Type	4 0-20: 0 - 20 mA current module 5 0-1V: 0 - 1V voltage module 6 0-5V: 0 - 5V voltage module 7 1-5V: 1 - 5V voltage module 8 0-10: 0 - 10V voltage module	0
	✓	CYC1	CYC1	Output 1 Cycle Time	Low: 0.1 High: 100.0 sec	18.0
	✓	O1FT	o1Ft	Output 1 Failure Transfer Mode	Select BPLS (bumpless transfer) or 0.0 ~ 100.0 % to continue output 1 control function as the unit fails, power starts or manual mode starts.	BPLS
	✓	OUT2	out2	Output 2 Function	0 none : Output 2 no function 1 Cool : PID cooling control 2 -AL2 : Perform alarm 2 function 3 dCPS : DC power supply module installed	2
	✓	O2TY	o2tY	Output 2 Signal Type	Same as O1TY	0
	✓	CYC2	CYC2	Output 2 Cycle Time	Low: 0.1 High: 100.0 sec	18.0
	✓	O2FT	o2Ft	Output 2 Failure Transfer Mode	Select BPLS (bumpless transfer) or 0.0 ~ 100.0 % to continue output 2 control function as the unit fails, power starts or manual mode starts.	BPLS
	✓	A1FN	A1Fn	Alarm 1 Function	0 none : No alarm function 1 ti mr : Dwell timer action 2 dE.Hi : Deviation high alarm 3 dE.Lo : Deviation low alarm 4 db.Hi : Deviation band out of band alarm 5 db.Lo : Deviation band in band alarm 6 PV 1H : IN1 process value high alarm 7 PV 1L : IN1 process value low alarm 8 PV2H : IN2 process value high alarm 9 PV2L : IN2 process value low alarm 10 P 12H : IN1 or IN2 process value high alarm 11 P 12L : IN1 or IN2 process value low alarm 12 d 12H : IN1−IN2 difference process value high alarm 13 d 12L : IN1−IN2 difference process value low alarm 14 Lb : Loop break alarm 15 SEnb : Sensor break or A-D fails	2
	✓	A1MD	A1md	Alarm 1 Operation Mode	0 norm : Normal alarm action 1 Ltch : Latching alarm action 2 Hold : Hold alarm action 3 Lt.Ho : Latching & Hold action	0

Table 1.6 Parameter Description (continued 5/7)

Contained in	Basic Function	Parameter Notation	Display Format	Parameter Description	Range	Default Value
Setup Menu	✓	A1FT	A 1.Ft	Alarm 1 Failure Transfer Mode	0 oFF : Alarm output OFF as unit fails 1 on : Alarm output ON as unit fails	1
	✓	A2FN	A2.Fn	Alarm 2 Function	Same as A1FN	2
	✓	A2MD	A2.md	Alarm 2 Operation Mode	Same as A1MD	0
	✓	A2FT	A2.Ft	Alarm 2 Failure Transfer Mode	Same as A1FT	1
		EIFN	Ei.Fn	Event Input Function	0 nonE : Event input no function 1 SP2 : SP2 activated to replace SP1 2 P1 d2 : PB2, TI2, TD2 activated to replace PB1, TI1, TD1 3 SP.P2 : SP2, PB2, TI2, TD2 activated to replace SP1, PB1, TI1, TD1 4 rSA 1 : Reset alarm 1 output 5 rSA2 : Reset alarm 2 output 6 rA 1.2 : Reset alarm 1 & alarm 2 7 do 1 : Disable Output 1 8 do2 : Disable Output 2 9 do 1.2 : Disable Output 1 & Output 2 10 LocK : Lock All Parameters 11 rESP : Selects remote setpoint active	1
		PVMD	PV.md	PV Mode Selection	0 PV 1 : Use PV1 as process value 1 PV2 : Use PV2 as process value 2 P 1-2 : Use PV1 – PV2 (difference) as process value 3 P2- 1 : Use PV2 – PV1 (difference) as process value	0
		FILT	Fi Lt	Filter Damping Time Constant of PV	0 0 : 0 second time constant 1 0.2 : 0.2 second time constant 2 0.5 : 0.5 second time constant 3 1 : 1 second time constant 4 2 : 2 seconds time constant 5 5 : 5 seconds time constant 6 10 : 10 seconds time constant 7 20 : 20 seconds time constant 8 30 : 30 seconds time constant 9 60 : 60 seconds time constant	2
	✓	SELF	SELF	Self Tuning Function Selection	0 nonE : Self tune function disabled 1 YES : Self tune function enabled	0
		SLEP	SLEP	Sleep mode Function Selection	0 nonE : Sleep mode function disabled 1 YES : Sleep mode function enabled	0

Table 1.6 Parameter Description

Contained in	Basic Function	Parameter Notation	Display Format	Parameter Description	Range	Default Value
Setup Menu		SPMD	SP.md	Set point Mode Selection	0 SP 1.2 : Use SP1 or SP2 (depends on EIFN) as set point 1 mi nr : Use minute ramp rate as set point 2 Hr.r : Use hour ramp rate as set point 3 PV 1 : Use IN1 process value as set point 4 PV2 : Use IN2 process value as set point 5 PuMP : Selected for pump control	0
	✓	SP1L	SP 1L	SP1 Low Scale Value	Low: -19999 High: 45536	0 C (32.0 F)
	✓	SP1H	SP 1H	SP1 High Scale Value	Low: -19999 High: 45536	1000.0 C (1832.0 F)
		SP2F	SP2F	Format of set point 2 Value	0 ACtu : set point 2 (SP2) is an actual value 1 dEV. : set point 2 (SP2) is a deviation value	0
	✓	SEL1	SEL 1	Select 1'st Parameter	0 nonE : No parameter put ahead 1 ti mE : Parameter TIME put ahead 2 A 1SP : Parameter A1SP put ahead 3 A 1dV : Parameter A1DV put ahead 4 A2SP : Parameter A2SP put ahead 5 A2dV : Parameter A2DV put ahead 6 rAMP : Parameter RAMP put ahead 7 oFSt : Parameter OFST put ahead 8 rEFC : Parameter REFC put ahead 9 SHi F : Parameter SHIF put ahead 10 Pb 1 : Parameter PB1 put ahead 11 t. 1 : Parameter TI1 put ahead 12 td 1 : Parameter TD1 put ahead 13 C.Pb : Parameter CPB put ahead 14 db : Parameter DB put ahead 15 SP2 : Parameter SP2 put ahead 16 Pb2 : Parameter PB2 put ahead 17 t. 2 : Parameter TI2 put ahead 18 td2 : Parameter TD2 put ahead	0
	✓	SEL2	SEL2	Select 2'nd Parameter	Same as SEL1	0
	✓	SEL3	SEL3	Select 3'rd Parameter	Same as SEL1	0
	✓	SEL4	SEL4	Select 4'th Parameter	Same as SEL1	0
	✓	SEL5	SEL5	Select 5'th Parameter	Same as SEL1	0
Calibration Mode Menu	✓	AD0	Ad0	A to D Zero Calibration Coefficient	Low: -360 High: 360	—
	✓	ADG	AdG	A to D Gain Calibration Coefficient	Low: -199.9 High: 199.9	—
	✓	V1G	V 1G	Voltage Input 1 Gain Calibration Coefficient	Low: -199.9 High: 199.9	—
	✓	CJTL	CJtL	Cold Junction Low Temperature Calibration Coefficient	Low: -5.00 C High: 40.00 C	—

Table 1.6 Parameter Description (continued 7/7)

Contained in	Basic Function	Parameter Notation	Display Format	Parameter Description	Range				Default Value
Calibration Mode Menu	✓	CJG	CJG	Cold Junction Gain Calibration Coefficient	Low:	-199.9	High:	199.9	—
	✓	REF1	rEF.1	Reference Voltage 1 Calibration Coefficient for RTD 1	Low:	-199.9	High:	199.9	—
	✓	SR1	Sr.1	Serial Resistance 1 Calibration Coefficient for RTD 1	Low:	-199.9	High:	199.9	—
	✓	MA1G	mA1G	mA Input 1 Gain Calibration Coefficient	Low:	-199.9	High:	199.9	—
	✓	V2G	V2G	Voltage Input 2 Gain Calibration Coefficient	Low:	-199.9	High:	199.9	—
	✓	MA2G	mA2G	mA Input 2 Gain Calibration Coefficient	Low:	-199.9	High:	199.9	—
Display Mode Menu	✓	PVHI	PV.Hi	Historical Maximum Value of PV	Low:	-19999	High:	45536	—
	✓	PVLO	PV.Lo	Historical Minimum Value of PV	Low:	-19999	High:	45536	—
	✓	MV1	H___	Current Output 1 Value	Low:	0	High:	100.00 %	—
	✓	MV2	C___	Current Output 2 Value	Low:	0	High:	100.00 %	—
	✓	DV	dV	Current Deviation (PV-SV) Value	Low:	-12600	High:	12600	—
	✓	PV1	PV 1	IN1 Process Value	Low:	-19999	High:	45536	—
	✓	PV2	PV2	IN2 Process Value	Low:	-19999	High:	45536	—
	✓	PB	Pb	Current Proportional Band Value	Low:	0	High:	500.0 C (900.0 F)	—
	✓	TI	ti	Current Integral Time Value	Low:	0	High:	4000 sec	—
	✓	TD	td	Current Derivative Time Value	Low:	0	High:	1440 sec	—
	✓	CJCT	CJCt	Cold Junction Compensation Temperature	Low:	-40.00 C	High:	90.00 C	—
	✓	PVR	PVr	Current Process Rate Value	Low:	-16383	High:	16383	—
	✓	PVRH	PVr.H	Maximum Process Rate Value	Low:	-16383	High:	16383	—
	✓	PVRL	PVr.L	Minimum Process Rate Value	Low:	-16383	High:	16383	—

Input Type	J_TC	K_TC	T_TC	E_TC	B_TC	R_TC	S_TC
Range Low	-120 C (-184 F)	-200 C (-328 F)	-250 C (-418 F)	-100 C (-148 F)	0 C (32 F)	0 C (32 F)	0 C (32 F)
Range High	1000 C (1832 F)	1370 C (2498 F)	400 C (752 F)	900 C (1652 F)	1820 C (3308 F)	1767.8 C (3214 F)	1767.8 C (3214 F)

Input Type	C_TC	P_TC	PT.DN	PT.JS	CT	Linear (V, mA) or SPEC
Range Low	0 C (32 F)	0 C (32 F)	-210 C (-346 F)	-200 C (-328 F)	0 Amp	-19999
Range High	2310 C (4200 F)	1395 C (2543 F)	700 C (1292 F)	600 C (1112 F)	90 Amp	45536

Table 1.5 Input (IN1 or IN2) Range

Chapter 2 Installation

⚠ Dangerous voltages capable of causing death are sometimes present
in this instrument. Before installation or beginning any troubleshooting procedures the power to all equipment must be switched off and isolated. Units suspected of being faulty must be disconnected and removed to a properly equipped workshop for testing and repair. Component replacement

⚠ To minimize the possibility of fire or shock hazards, do not expose this instrument to rain or excessive moisture.

⚠ Do not use this instrument in areas under hazardous conditions such as excessive shock, vibration, dirt, moisture, corrosive gases or oil. The ambient temperature of the areas should not exceed the maximum rating

2–1 Unpacking

Upon receipt of the shipment remove the unit from the carton and inspect the unit for shipping damage.
If any damage due to transit , report and claim with the carrier.
Write down the model number, serial number, and date code for future reference when corresponding with our service center. The serial number (S/N) and date code (D/C) are labeled on the box and the housing of control.

2–2 Mounting

Make panel cutout to dimension shown in Figure 2.1.

Take both mounting clamps away and insert the controller into panel cutout. Install the mounting clamps back. Gently tighten the screws in the clamp till the controller front panels is fitted snugly in the cutout.

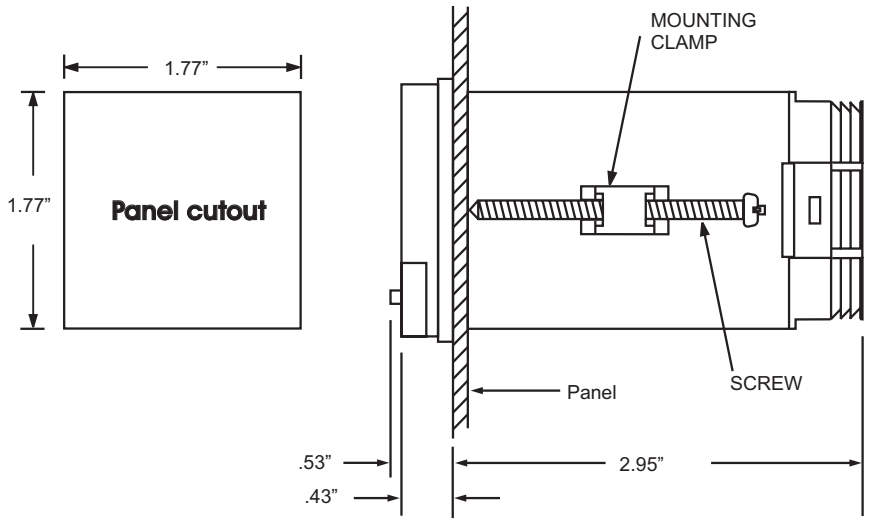

Figure 2.1 Mounting Dimensions

2–3 Wiring Precautions

* Before wiring, verify the label for correct model number and options. Switch off the power while checking.

* Care must be taken to ensure that maximum voltage rating specified on the label are not exceeded.

* It is recommended that power of these units to be protected by fuses or circuit breakers rated at the minimum value possible.

* All units should be installed inside a suitably grounded metal enclosure to prevent live parts being accessible from human hands and metal tools.

* All wiring must conform to appropriate standards of good practice and local codes and regulations. Wiring must be suitable for voltage, current, and temperature rating of the system.

* The " stripped " leads as specified in Figure 2.2 below are used for power and sensor connections.

* Beware not to over-tighten the terminal screws.

* Unused control terminals should not be used as jumper points as they may be internally connected, causing damage to the unit.

* Verify that the ratings of the output devices and the inputs as specified in Chapter 6 are not exceeded.

* Electric power in industrial environments contains a certain amount of noise in the form of transient voltage and spikes. This electrical noise can enter and adversely affect the operation of microprocessor-based controls. For this reason we strongly recommend the use of shielded thermocouple extension wire which connects the sensor to the controller. This wire is a twisted-pair construction with foil wrap and drain wire. The drain wire is to be attached to ground at one end only.

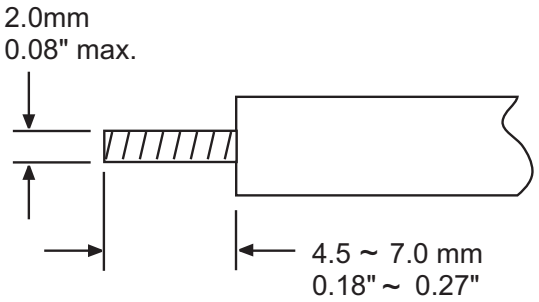

Figure 2.2 Lead Termination

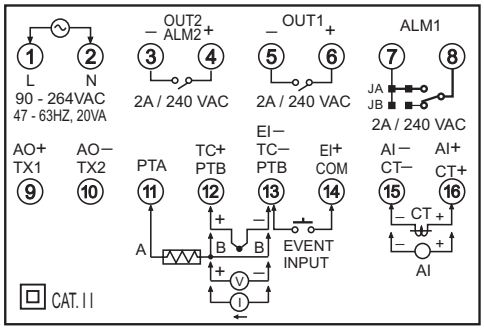

Figure 2.3 Rear Terminal Connection Diagram

2–4 Power Wiring

The controller is supplied to operate at 11-28 VAC / VDC or 90-264VAC.Check that the installation voltage corresponds with the power rating indicated on the product label before connecting power to the controller.

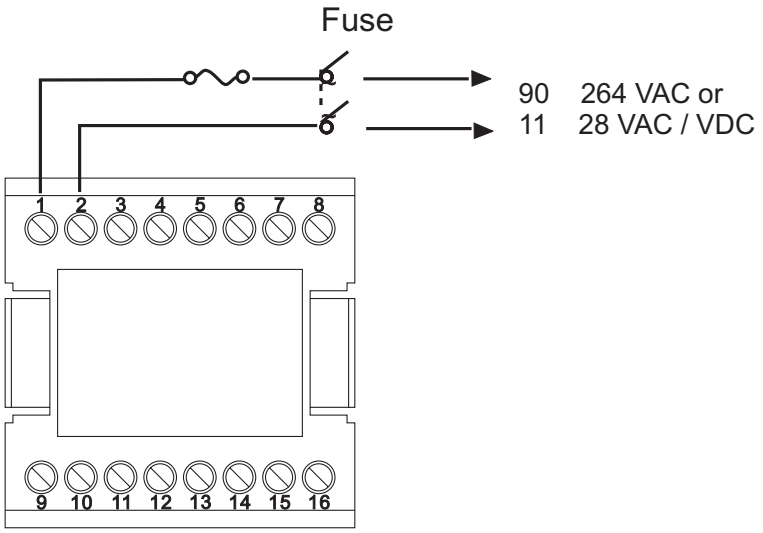

Figure 2.4
Power Supply Connections

⚠ This equipment is designed for installation in an enclosure which provides adequate protection against electric shock. The enclosure must be connected to earth ground.

Local requirements regarding electrical installation should be rigidly observed. Consideration should be given to prevent from unauthorized person access to the power terminals.

2–5 Sensor Installation Guidelines

Proper sensor installation can eliminate many problems in a control system. The probe should be placed so that it can detect any temperature change with minimal thermal lag. In a process that requires fairly constant heat output, the probe should be placed closed to the heater. In a process where the heat demand is variable, the probe should be closed to the work area. Some experiments with probe location are often required to find this optimum position.

In a liquid process, addition of a stirrer will help to eliminate thermal lag. Since the thermocouple is basically a point measuring device, placing more than one thermocouple in parallel can provide an average temperature readout and produce better results in most air heated processes.

Proper sensor type is also a very important factor to obtain precise measurements. The sensor must have the correct temperature range to meet the process requirements. In special processes the sensor might need to have different requirements such as leak-proof, anti-vibration, antiseptic, etc.

Standard sensor limits of error are +/-4degrees F (+/- 2degrees C) or 0.75% of sensed temperature (half that for special) plus drift caused by improper protection or an over-temperature occurrence. This error is far greater than controller error and cannot be corrected on the sensor except by proper

2–6 Thermocouple Input Wiring

IThermocouple input connections are shown in Figure 2.5. The correct type of thermocouple extension lead-wire MUST be used for the entire distance from thermocouple sensor to connection to the controller. Splices and joints should be avoided if at all possible. POLARITY MUST be observed when connecting thermocouples.

If the length of thermocouple plus the extension wire is too long, it may affect the temperature measurement. A 400 ohms K type or a 500 ohms J type thermocouple lead resistance will produce 1 degree C temperature error approximately.

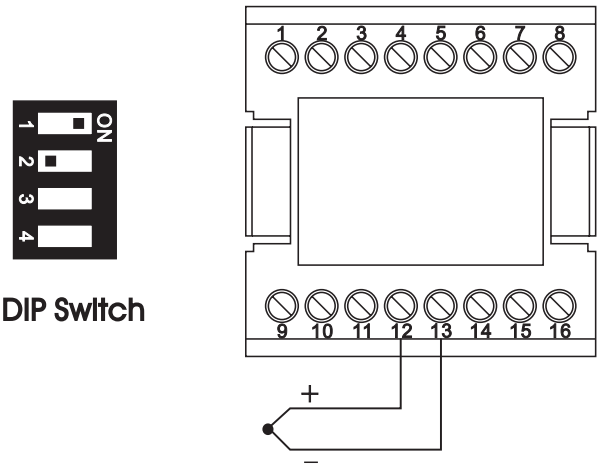

Figure 2.5
Thermocouple Input Wiring

2–7 RTD Input Wiring

RTD connection are shown in Figure 2.6, with the compensating lead connected to
terminal 12. For two-wire RTD inputs, terminals 12 and 13 should be linked. The three-wire RTD offers the capability of lead resistance compensation provided that

Two-wire RTD should be avoided, if possible, for the purpose of accuracy. A 0.4 ohm lead resistance of a two-wire RTD will produce 1 degree C temperature error.

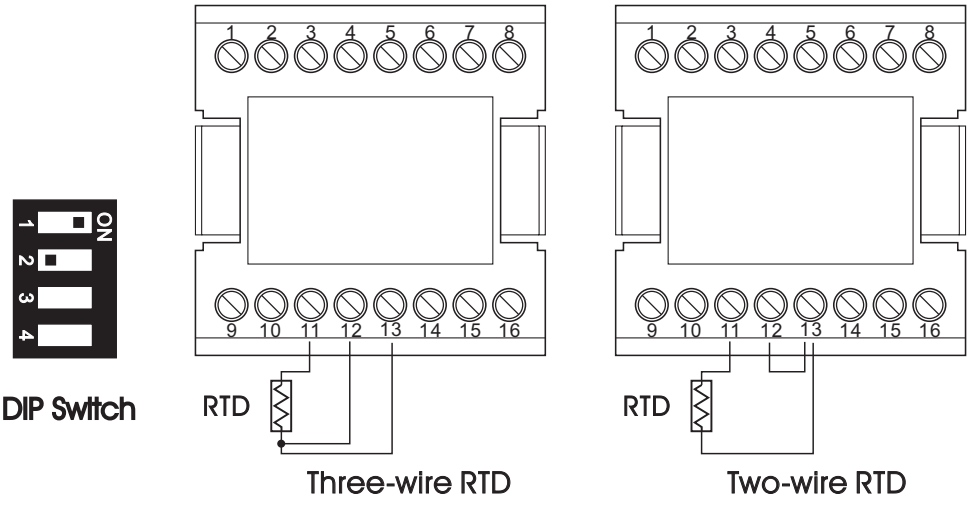

Figure 2.6
RTD Input Wiring

2–8 Linear DC Input Wiring

DC linear voltage and linear current connections for input 1 are shown in Figure 2.7 and Figure 2.8 .

DC linear voltage and linear current connections for input 2 are shown in Figure 2.9 and Figure 2.10 .

Figure 2.7
Input 1 Linear Voltage Wiring

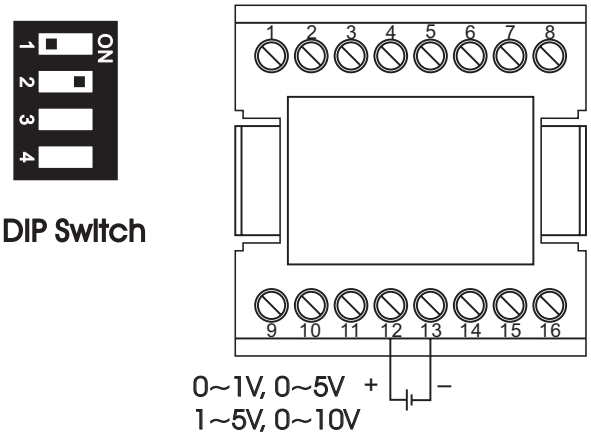

Figure 2.8
Input 1 Linear Current Wiring

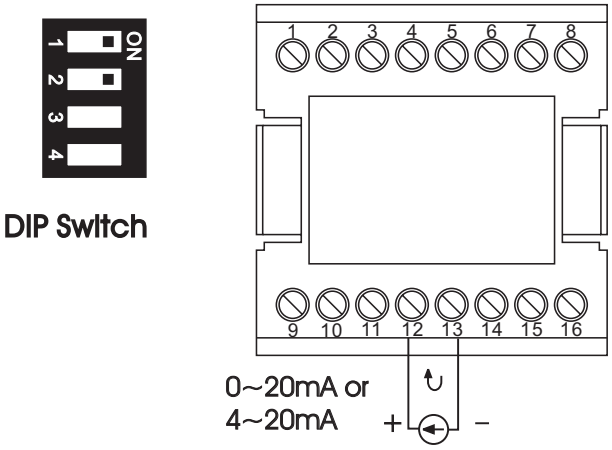

Figure 2.9
Input 2 Linear Voltage Wiring

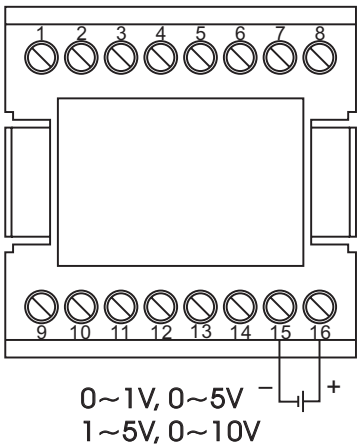

Figure 2.10
Input 2 Linear Current Wiring

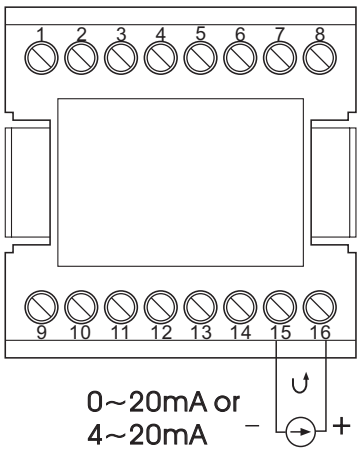

2–9 CT / Heater Current Input Wiring

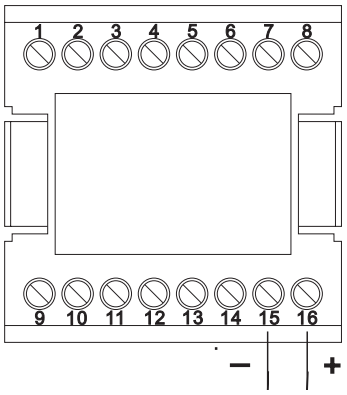

Figure 2.11
CT Input Wiring for Single Phase Heater

CT Signal Input *Total current CT94-1 not to exceed 50 A RMS.

2–10 Output 1 Wiring

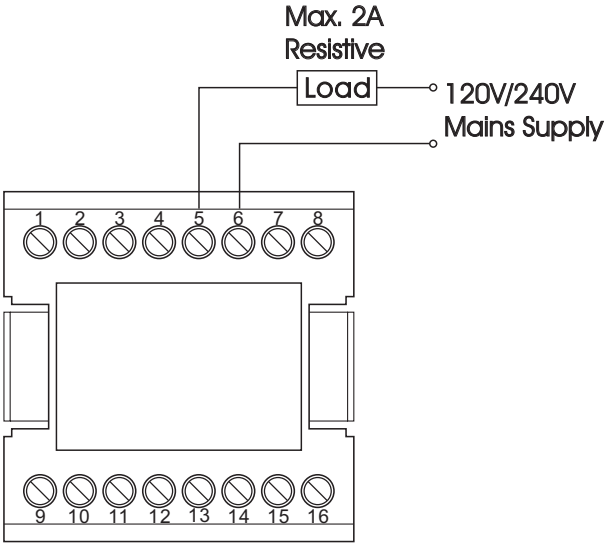

Relay Output

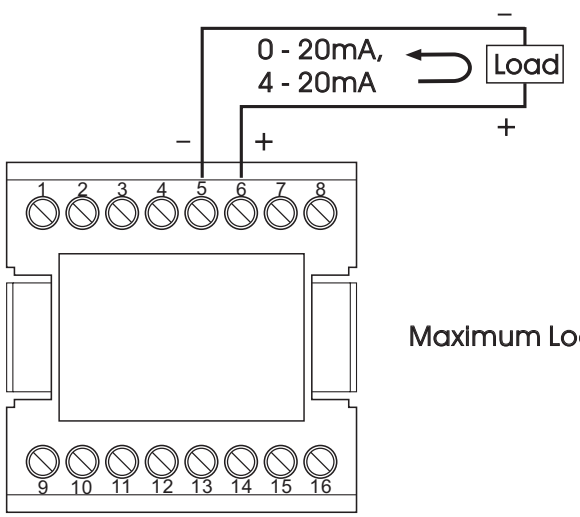

Maximum Load 500 ohms

Linear Current

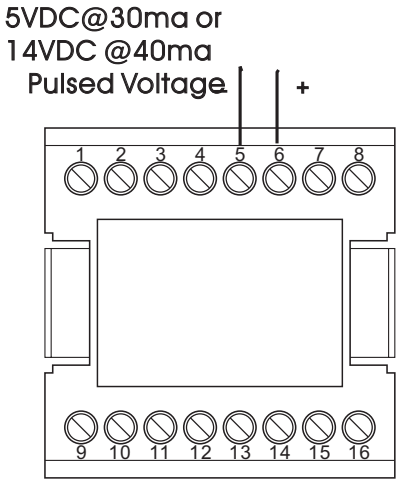

Pulsed Voltage to Drive SSR

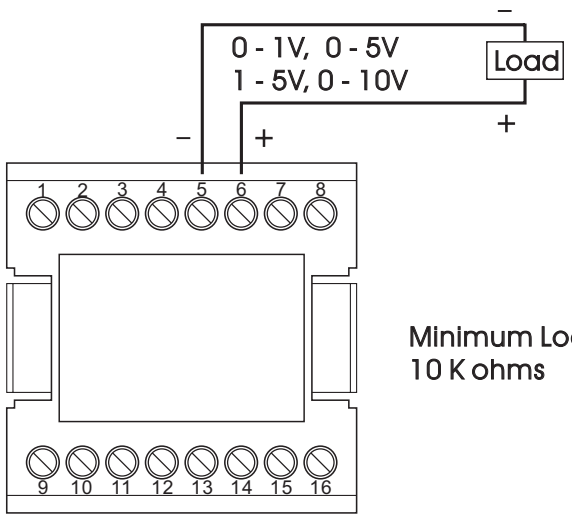

Minimum Load
10 K ohms

Linear Voltage

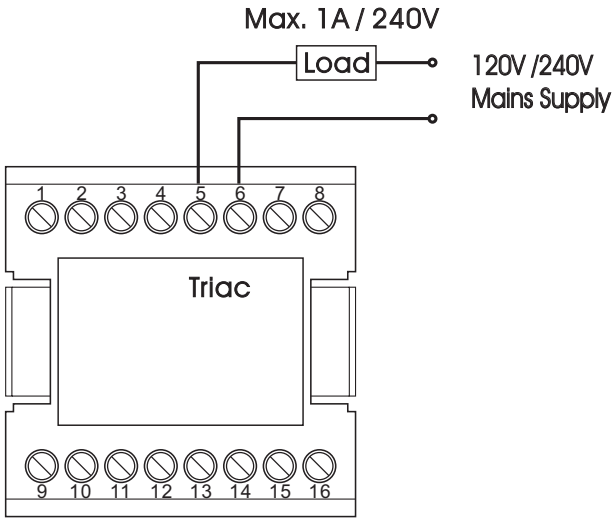

Triac (SSR) Output
Direct Drive

Figure 2.12
Output 1 Wiring

2–11 Output 2 Wiring

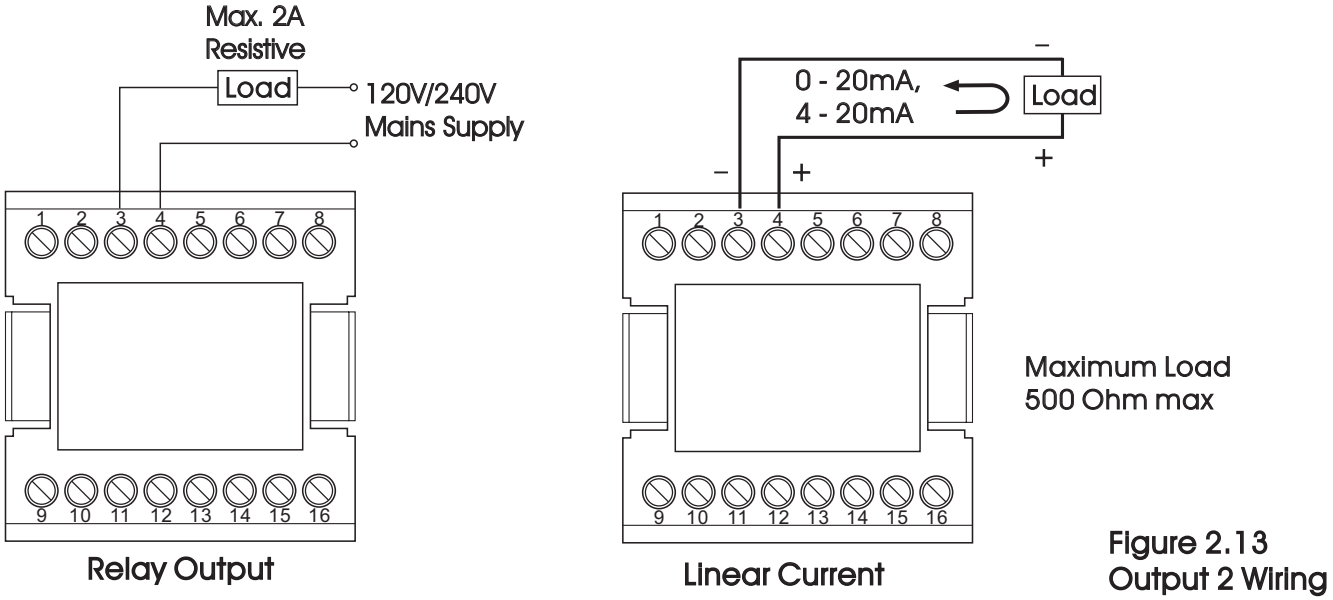

Figure 2.13
Output 2 Wiring

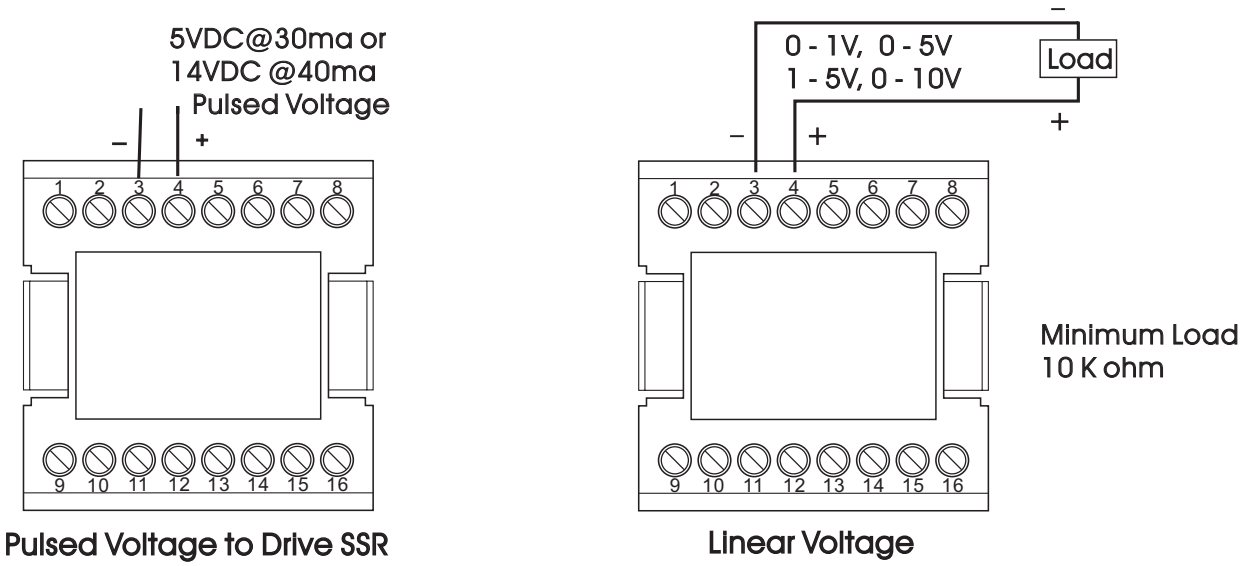

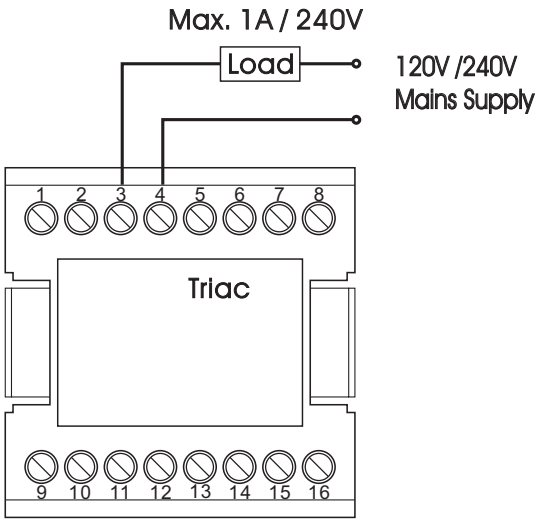

2–12 Event Input wiring

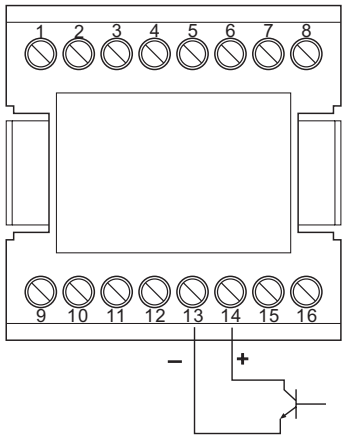

Open Collector Input

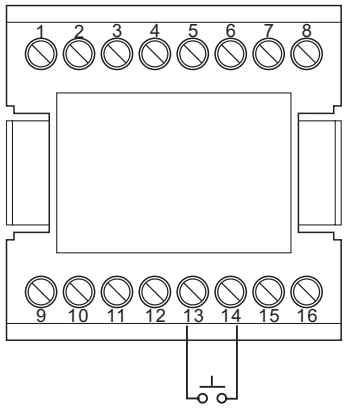

Switch Input

Figure 2.14
Event Input Wiring

The event input can accept a switch signal as well as an open collector signal. The event input function (EIFN) is activated as the switch is closed or an open collector (or a logic signal) is pulled down.

2–13 Alarm 1 Wiring

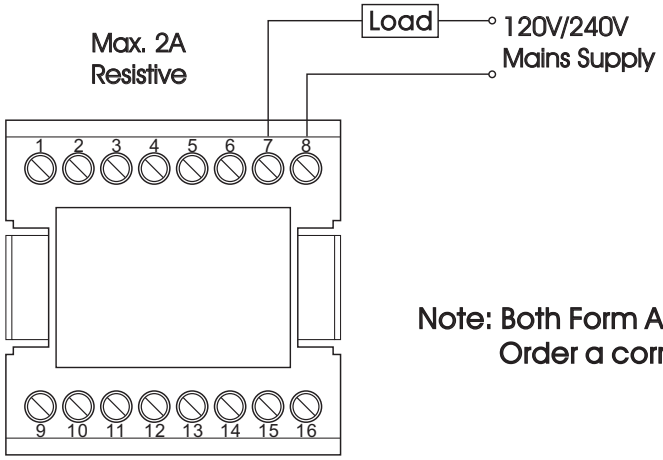

Relay Output

Figure 2.15
Alarm 1 Wiring

Note: Both Form A and B contacts are available for alarm 1 relay.
Order a correct form for alarm 1 to suit for your application.

2–14 Alarm 2 Wiring

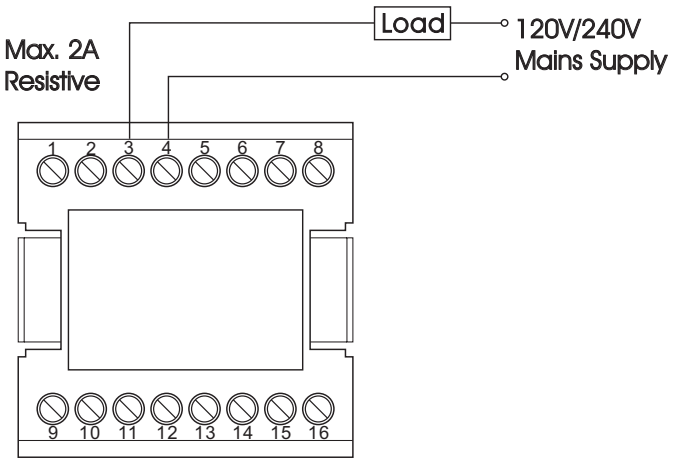

Relay Output

Figure 2.16
Alarm 2 Wiring

2–15 RS-485

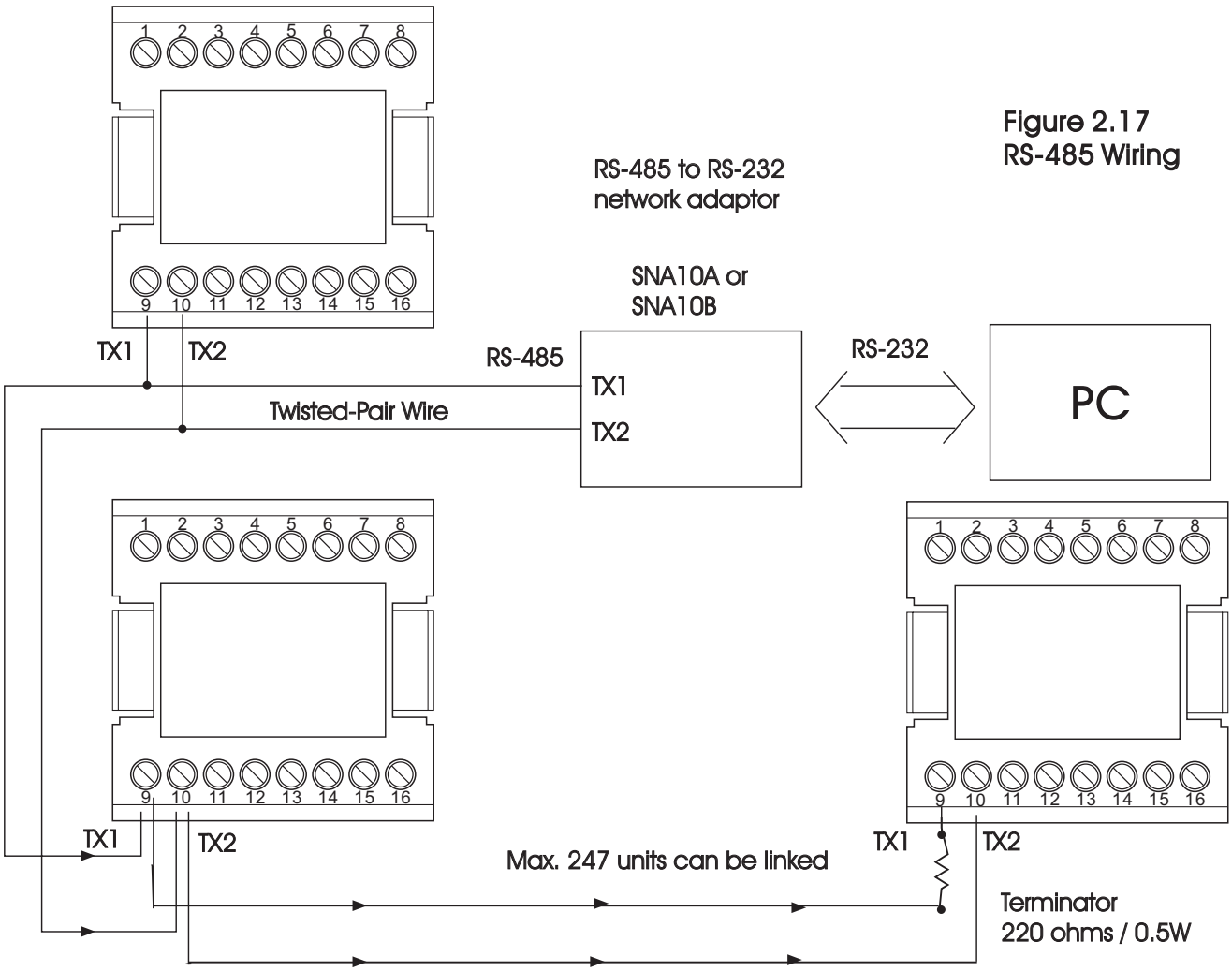

Figure 2.17
RS-485 Wiring

2–16 Analog Retransmission

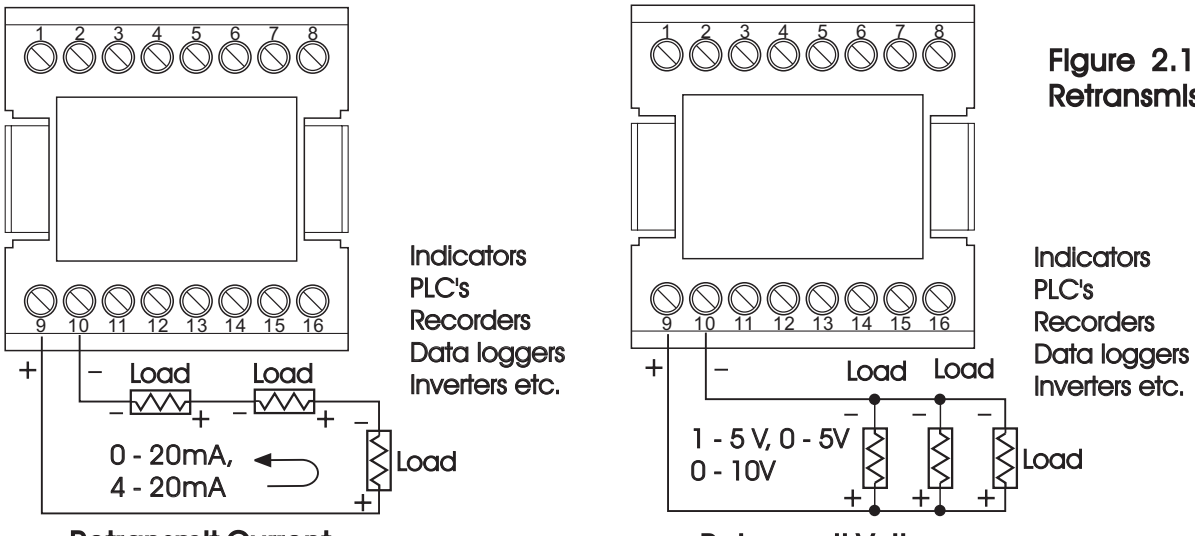

Figure 2.18 Analog
Retransmission Wiring

Retransmit Current

Do not exceed 500 ohms total load

Retransmit Voltage

Minimum load must be greater than 10K ohms.

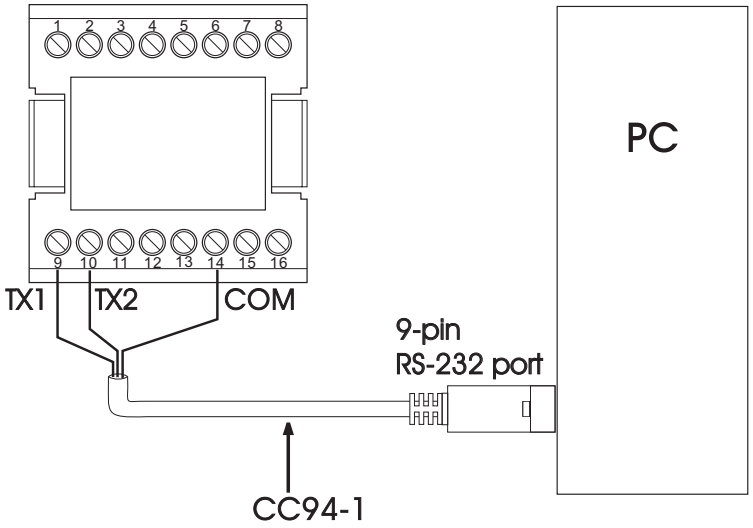

Figure 2.19
RS-232 Wiring

Note: If the FDC-9300 is configured for RS-232 communication, the EI (Event Input) is disconnected internally. The unit can no longer perform event input function (EIFN).

When you insert a RS-232 module (CM94-2) to the connectors on CPU board (C930), the jumper JP22 on terminal board (T930) **must** be modified as following: J1 must be shorted and J2 must be cut and left open. Location of JP22 is shown in the following diagram.

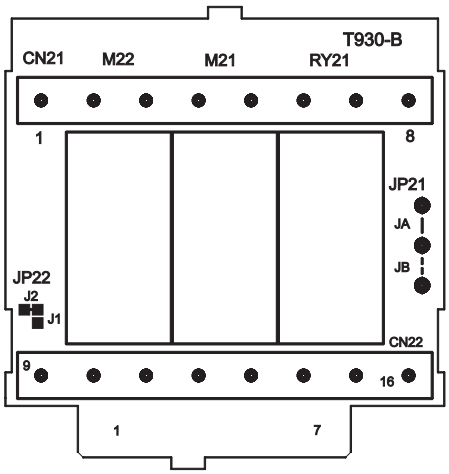

Figure 2.20
Location of Jumper JP22

If you use a conventional 9-pin RS-232 cable instead of CC94-1, the cable must be modified according to the following circuit diagram.

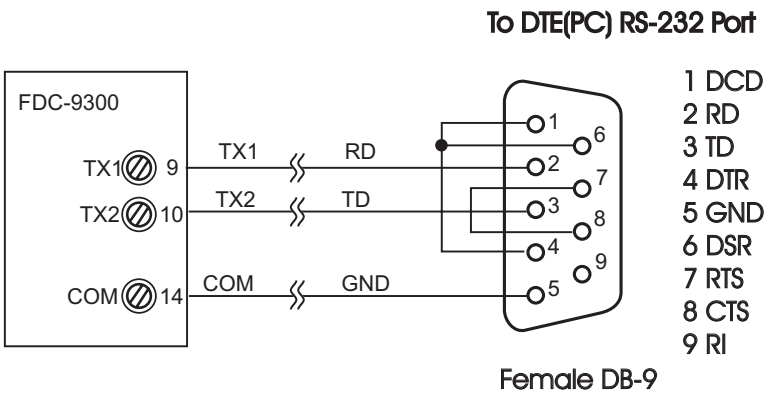

Figure 2.21
Configuration of RS-232 Cable

Chapter 3 Programming Special Functions

This unit provides an useful parameter " FUNC " which can be used to select the function complexity level before setup. If the Basic Mode (FUNC = BASC) is selected for a simple application, then the following functions are ignored and deleted from the full function menu:
RAMP, SP2, PB2, TI2, TD2, PL1, PL2, COMM, PROT, ADDR, BAUD, DATA, PARI, STOP, AOFN, AOLO, AOHI, IN2, IN2U, DP2, IN2L, IN2H, EIFN, PVMD, FILT, SLEP, SPMD and SP2F.

Basic Mode capabilities:

(1) Input 1: Thermocouple, RTD, Volt, mA
(2) Input 2: CT for heater break detection
(3) Output 1: Heating or Cooling (Relay, SSR, SSRD, Volt, mA)
(4) Output 2 : Cooling (Relay, SSR, SSRD, Volt, mA), DC Power supply.
(5) Alarm 1: Relay for Deviation, Deviation Band, Process, Heater Break, Loop Break, Sensor Break, Latch, Hold or Normal Alarm.
(6) Alarm 2: Relay for Deviation, Deviation Band, Process, Heater Break, Loop Break, Sensor Break, Latch, Hold or Normal Alarm.
(7) Dwell Timer
(8) Heater Break Alarm
(9) Loop Break Alarm
(10) Sensor Break Alarm
(11) Failure Transfer
(12) Bumpless Transfer
(13) PV1 Shift
(14) Programmable SP1 Range
(15) Heat-Cool control
(16) Hardware Lockout
(17) Self-Tune
(18) Auto-Tune
(19) ON-OFF, P, PD, PI, PID Control
(20) User Defined Menu (SEL)
(21) Manual Control
(22) Display Mode
(23) Reload Default Values
(24) Isolated DC Power Supply

If you don't need:

(1) Second setpoint
(2) Second PID
(3) Event input
(4) Soft start (RAMP)
(5) Remote set point
(6) Complex process value
(7) Output power limit
(8) Digital communication
(9) Analog retransmission
(10) Power shut off (Sleep Mode)
(11) Digital filter
(12) Pump control
(13) Remote lockout

then you can use Basic Mode.

3–1 Rearrange User Menu

The conventional controllers are designed with a fixed parameters' scrolling. If you need a more friendly operation to suit your application, the manufacturer will say " sorry " to you. The FDC-9300 has the flexibility for you to select those parameters which are most significant to you and put these parameters in the front of display sequence.

SEL1 : Selects the most significant parameter for view and change.
SEL2 : Selects the 2'nd significant parameter for view and change.
SEL3 : Selects the 3'rd significant parameter for view and change.
SEL4 : Selects the 4'th significant parameter for view and change.
SEL5 : Selects the 5'th significant parameter for view and change.
Range : NONE, TIME, A1.SP, A1.DV, A2.SP, A2.DV, RAMP, OFST, REFC, SHIF, PB1, TI1, TD1, C.PB, SP2, PB2, TI2, TD2

When using the up-down key to select the parameters, you may not obtain all of the above parameters. The number of visible parameters is dependent on the setup condition. The hidden parameters for the specific application are also deleted from the SEL selection.

SEL1

SEL2

SEL3

SEL4

SEL5
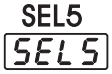

Example : SEL1 selects TIME
SEL2 selects A2.DV
SEL3 selects OFST
SEL4 selects PB1
SEL5 selects NONE

Now, the upper display scrolling becomes :

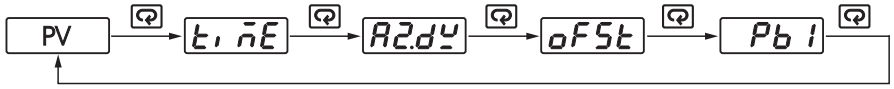

3–2 Dwell Timer

Alarm 1 or alarm 2 can be configured as a dwell timer by selecting TIMR for A1FN or A2FN but not BOTH. Otherwise Er07 will appear.
As the dwell timer is configured, the parameter TIME is used for the dwell time adjustment.
The dwell time is measured in minutes ranging from 0 to 6553.5 minutes.
Once the process reaches the setpoint the dwell timer begins to count from zero until time out. The timer relay output will remain unchanged until the dwell time has timed out. Then output will change state.
The dwell timer operation is shown in the example below.

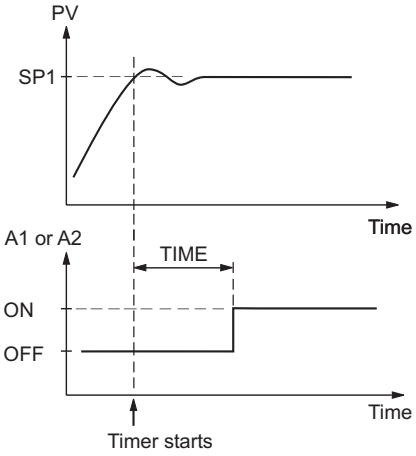

Figure 3.1 Dwell Timer Function

Er07 Error Code

If alarm 1 is configured as dwell timer, A1SP, A1DV, A1HY and A1MD are hidden. Same case is for alarm 2.

Example :
Set A1FN=TIMR or A2FN=TIMR but not both.
Adjust TIME in minutes
A1MD (if A1FN=TIMR) or A2MD (if A2FN=TIMR) is ignored in this case.
If a form B relay is required for dwell timer, then order form B alarm 1 and configure A1FN. Form B relay is not available for alarm 2.

3–3 Manual Control

The manual control may be used for the following purposes:

(1) To test the process characteristics to obtain a step response as well as an impulse response and use these data for tuning a controller.

(2) To use manual control instead of a close loop control as the sensor fails or the controller's A-D converter fails. NOTE that a bumpless transfer can not be used for a longer time. See section 3-6.

(3) In certain applications it is desirable to supply a process with a constant demand.

Operation:

Press ⟲ ⩛ until HAnd ---- (Hand Control) appears on the display.
Press ⟲ for 3 seconds then the upper display will begin to flash and the lower display will show H___ . The controller now enters the manual control mode.
Pressing ⟲ the lower display will show C___ and H___ alternately where H___ indicates output 1 (or heating) control variable value MV1 and C___ indicates output 2 (or cooling) control variable value MV2. Now you can use up-down key to adjust the percentage values for H or C.

H38.4 Means
MV1=38.4 %
for OUT1 (or Heating)

C 7.63 Means
MV2=7.63 %
for OUT2 (or Cooling)

The controller performs open loop control as long as it stays in manual control mode. The H value is exported to output 1 (OUT1) and C value is exported to output 2 provided that OUT2 is performing cooling function (ie. OUT2 selects COOL).

UM9300 2.0

Exit Manual Control

To press ⩚ ⩛ keys the controller will revert to its previous operating mode (may be a failure mode or normal control mode).

Exception

If OUT1 is configured as ON-OFF control (ie. PB1=0 if PB1 is assigned or PB2=0 if PB2 is assigned by event input), the controller will never perform manual control mode.

3–4 Failure Transfer

The controller will enter **failure mode** as one of the following conditions occurs:

1. **SB1E** occurs (due to the input 1 sensor break or input 1 current below 1mA if 4-20 mA is selected or input 1 voltage below 0.25V if 1-5 V is selected) if PV1, P1-2 or P2-1 is selected for PVMD or PV1 is selected for SPMD.
2. **SB2E** occurs (due to the input 2 sensor break or input 2 current below 1mA if 4-20 mA is selected or input 2 voltage below 0.25V if 1-5 V is selected) if PV2, P1-2 or P2-1 is selected for PVMD or PV2 is selected for SPMD.
3. **ADER** occurs due to the A-D converter of the controller fails.

Output 1 Failure Transfer, if activated, will perform :

1. If output 1 is configured as proportional control (PB1/= 0), and BPLS is selected for O1FT, then output 1 will perform bumpless transfer. Thereafter the previous averaging value of MV1 will be used for controlling output 1.
2. If output 1 is configured as proportional control (PB1/= 0), and a value of 0 to 100.0 % is set for O1FT, then output 1 will perform failure transfer. Thereafter the value of O1FT will be used for controlling output 1.
3. If output 1 is configured as ON-OFF control (PB1 = 0), then output 1 will be driven OFF if O1FN selects REVR and be driven ON if O1FN selects DIRT.

Output 2 Failure Transfer, if activated, will perform :

1. If OUT2 selects COOL, and BPLS is selected for O1FT, then output 2 will perform bumpless transfer. Thereafter the previous averaging value of MV2 will be used for controlling output 2.
2. If OUT2 selects COOL, and a value of 0 to 100.0 % is set for O2FT, then output 2 will perform failure transfer. Thereafter the value of O1FT will be used for controlling output 2.

Alarm 1 Failure Transfer is activated as the controller enters failure mode. Thereafter the alarm 1 will transfer to the ON or OFF state preset by A1FT.

Alarm 2 Failure Transfer is activated as the controller enters failure mode. Thereafter the alarm 2 will transfer to the ON or OFF state preset by A2FT.

Failure Mode Occurs as :

1. SB1E
2. SB2E
3. ADER

Failure Transfer of outout 1 and output 2 occurs as :

1. Power start (within 2.5 seconds)
2. Failure mode is activated
3. Manual mode is activated
4. Calibration mode is activated

Failure Transfer of alarm 1 and alarm 2 occurs as :

1. Failure mode is activated

Failure Transfer Setup :

1. O1FT
2. O2FT
3. A1FT
4. A2FT

Exception: If Loop Break (LB) alarm or sensor Break (SENB) alarm is configured forA1FN or A2FN, the alarm1/ 2 will be switched to ON state independent of the setting of A1FT/ A2FT. If Dwell Timer (TIMR) is configured for A1FN/A2FN, the alarm 1/ alarm2 will not perform failure transfer.

3–5 Signal Conditioner DC Power Supply

Three types of isolated DC power supply are available to supply an external transmitter or sensor. These are 20V rated at 25mA, 12V rated at 40 mA and 5V rated at 80 mA. The DC voltage is delivered to the output 2 terminals.

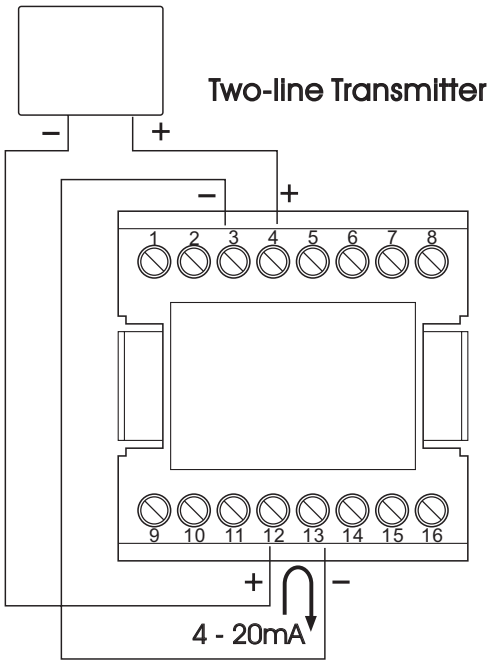

Set

OUT2 = dCPS DC Power Supply

Figure 3.2
DC Power Supply Applications

Caution:

Don't use the DC power supply beyond its rating current to avoid damage.Purchase a correct voltage to suit your external devices.
See ordering code in section 1-2.

3–6 Bumpless Transfer

The bumpless transfer function is available for output 1 and output 2 (provided that OUT2 is configured as COOL).

Bumpless Transfer is enabled by selecting BPLS for O1FT and/or O2FT and activated as one of the following cases occurs :

1. Power starts (within 2.5 seconds).
2. The controller enters the failure mode. See section 3-4 for failure mode descriptions.
3. The controller enters the manual mode. See section 3-3 for manual mode descriptions.
4. The controller enters the calibration mode. See Chapter 4 for calibration mode descriptions.

As the bumpless transfer is activated, the controller will transfer to open-loop control and uses the previous averaging value of MV1 and MV2 to continue control.

Bumpless Transfer Setup :

1. O1FT = BPLS
2. O2FT = BPLS

Bumpless Transfer Occurs as :

1. Power Starts (within 2.5 seconds)
2. Failure mode is activated
3. Manual mode is activated
4. Calibration mode is activated

Without Bumpless Transfer

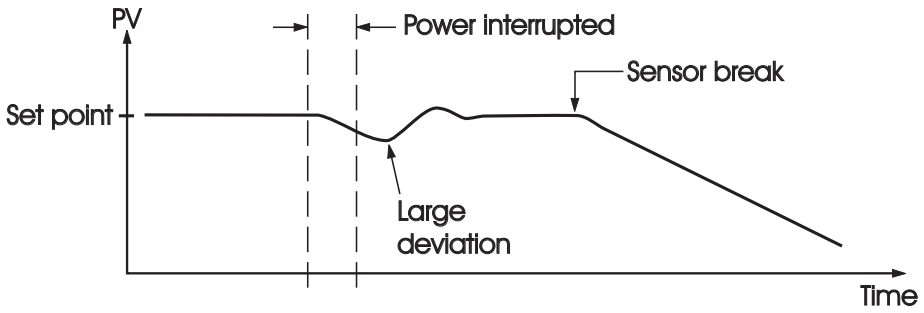

Figure 3.3 Benefits of Bumpless Transfer

Since the hardware and software need time to be initialized, the control is abnormal as the power is recovered and results in a large disturbance to the process. During the sensor breaks, the process loses power.

With Bumpless Transfer

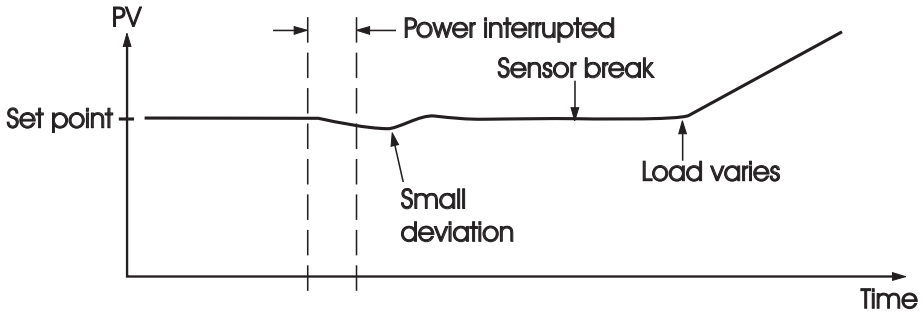

After bumpless transfer configured, the correct control variable is applied immediately as the power is recovered, the disturbance is small. During the sensor breaks, the controller continues to control by using its previous value. If the load doesn't change, the process will remain stable. Thereafter, once the load changes, the process may run away. Therefore, **you should not rely on a bumpless transfer for a longer time.** For fail safe reason, an additional alarm should be used to announce the operator when the system fails. For example, a Sensor Break Alarm, if configured, will switch to failure state and announces the operator to use manual control or take a proper security action when the system enters failure mode.

Warning :After system fails, never depend on bumpless transfer for a long time, otherwise it might cause a problem to the system to run away.

3–7 Self – Tuning

The Self-tuning which is designed by using an **Innovative algorithm** provides an alternative option for tuning the controller. It is activated as soon as SELF is selected with YES. When Self-tuning is working, the controller will change its working PID values and compares the process behavior with previous cycle. If the new PID values achieve a better control, then changing the next PID values in the same direction, otherwise, changing the next PID values in reverse direction. When an optimal condition is obtained, the optimal PID values will be stored in PB1, TI1, TD1 or PB2, TI2, TD2 which is determined by Event Input conditions. When Self-tuning is completed, the value of SELF will be changed from YES to NONE to disable self-tuning function.

Self-tune Menu

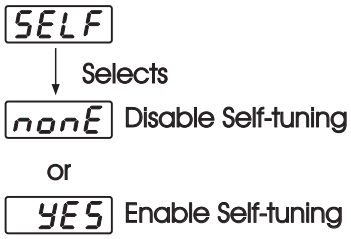

When the Self-tuning is enabled, the control variables are tuned slowly so that the disturbance to the process is less than auto-tuning. Usually, the Self-tuning will perform successfully with no need to apply additional auto-

Default
SELF=NONE

Exceptions: The Self-tuning will be disabled as soon as one of the following conditions occurs:
1. SELF is selected with NONE.
2. The controller is used for on-off control, that is PB=0.
3. The controller is used for manual reset, that is TI=0.
4. The controller is under loop break condition.
5. The controller is under failure mode (e.g. sensor break).
6. The controller is under manual control mode.
7. The controller is under sleep mode.
8. The controller is being calibrated.

If the self-tuning is enabled, the auto-tuning can still be used any time. The self-tuning will use the auto-tuning results for its initial values.

Benefits of Self-tuning:
1. Unlike auto-tuning, Self-tuning will produce less disturbance to the
2. process.
   Unlike auto-tuning, Self-tuning doesn't change control mode during tuning
3. period. It always performs PID control.
   Changing set point during Self-tuning is allowable. Hence, Self-tuning can be used for ramping set point control as well as remote set point control where the set point is changed from time to time.

Benefits of Self-tune:
1. Less disturbance to the process.
2. Perform PID control during tuning period.
3. Available for ramping set point control and remote set point control.

Operation:
The parameter SELF is contained in setup menu. Refer to Section 1-5 to obtain SELF for initiating a self-tuning.

3−8 Auto− Tuning

⚠ The auto-tuning process is performed at set point.
The process will oscillate around the set point during tuning process. Set a set point to a lower value if overshooting beyond the normal process value is likely to cause damage.

The auto-tuning is applied in cases of :

* Initial setup for a new process
* The set point is changed substantially from the previous auto-tuning value
* The control result is unsatisfactory

Operation :

1. The system has been installed normally.
2. Use the default values for PID before tuning.
   The default values are : PB1=PB2=18.0° F
   TI1=TI2=100 sec, TD1=TD2=25.0 sec, Of course, you can use other reasonable values for PID before tuning according to your previous experiences. But don't use a zero value for PB1 and TI1 or PB2 and TI2, otherwise, the auto-tuning program will be disabled.
3. Set the set point to a normal operating value or a lower value if overshooting beyond the normal process value is likely to cause damage.
4. Press ⟲ ⩛ until [A_t] [----] appears on the display.
5. Press ⟲ for at least 3 seconds. The upper display will begin to flash and the auto-tuning procedure is beginning.

NOTE :

Any of the ramping function, remote set point or pump function, if used, will be disabled once auto-tuning is proceeding.

Procedures:

The auto-tuning can be applied either as the process is warming up (Cold Start) or as the process has been in steady state (Warm Start). See Figure 3.4.

If the auto-tuning begins apart from the set point (Cold Start), the unit enters **Warm-up cycle**. As the process reaches the set point value, the unit enters **waiting cycle**. The waiting cycle elapses a double integral time (TI1 or TI2, dependent on the selection,) then it enters a **learning cycle**. The double integral time is introduced to allow the process to reach a stable state. Before learning cycle, the unit performs **pre-tune** function with a PID control. While in learning cycle the unit performs **post-tune** function with an ON-OFF control. Learning cycle is used to test the characteristics of the process. The data are measured and used to determine the optimal PID values. At the end of the two successive ON-OFF cycles the PID values are obtained and automatically stored in the nonvolatile memory. After the auto-tuning procedures are completed, the process display will cease to flash and the unit revert to PID control by using its new PID values.
During pre-tune stage the PID values will be modified if any unstable phenomenon which is caused by incorrect PID values is detected. Without pre-tune stage, like other conventional controller, the tuning result will be strongly related to the time when the auto-tuning is applied. Hence different values will be obtained every time as auto-tuning is completed without pre-tune. It is particularly true when the auto-tuning are applied by using cold start and warm start.

Applicable Conditions :
PB1≠0, TI1≠0 if PB1,TI1,TD1 assigned

PB2≠0, TI2≠0, if PB2, TI2, TD2 assigned

Pre-tune Function Advantage:
Consistent tuning results can be obtained

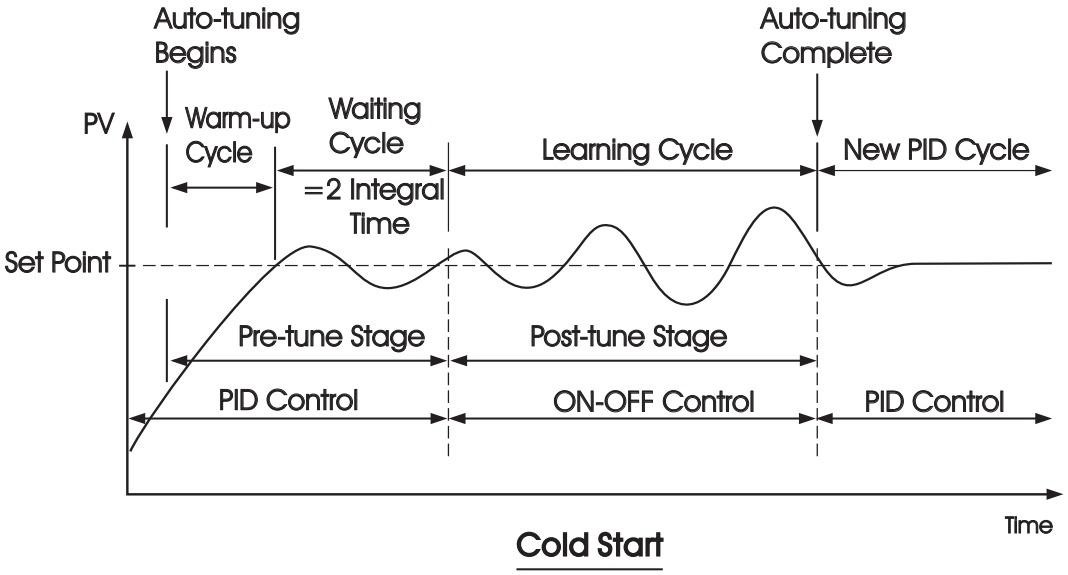

Figure 3.4
Auto-tuning Procedure

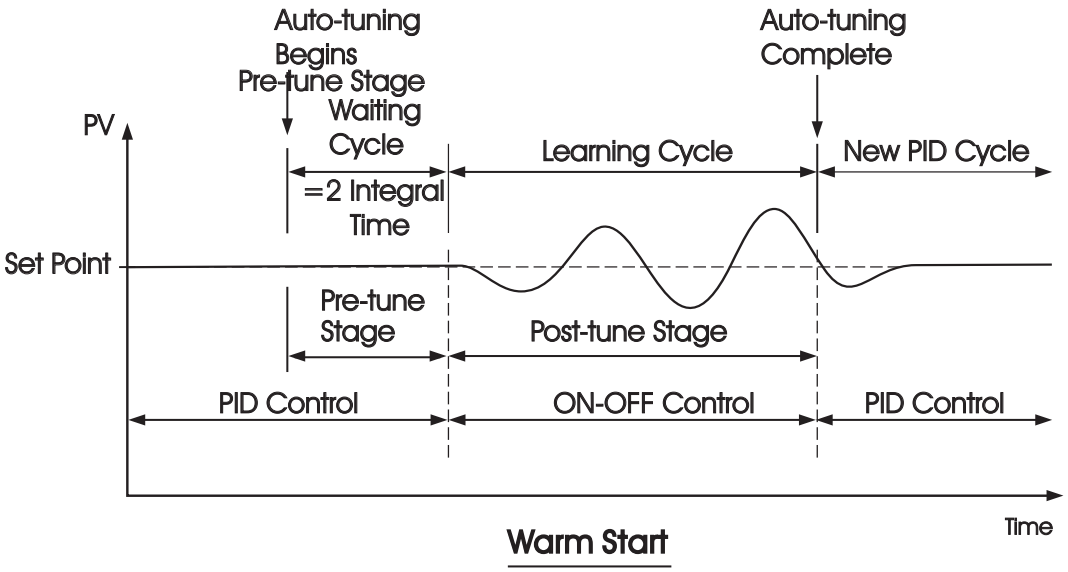

If the auto-tuning begins near the set point (warm start), the unit passes the warm-up cycle and enters the waiting cycle. Afterward the procedures are same as that described for cold start.

AtEr Auto-Tuning Error

If auto-tuning fails an ATER message will appear on the upper display in cases of :

AtEr Auto-Tuning Error

- If PB exceeds 9000 (9000 PU, 900.0 F or 500.0 C).
- or if TI exceeds 1000 seconds.
- or if set point is changed during auto-tuning procedure.
- or if event input state is changed so that set point value is changed.

Solutions to AtEr

1. Try auto-tuning once again.
2. Don't change set point value during auto-tuning procedure.
3. Don't change event input state during auto-tuning procedure.
4. Use manual tuning instead of auto-tuning. (See section 3-20).
5. Touch any key to reset AtEr message.

3–9 Manual Tuning

In certain applications (very few) using both self-tuning and auto-tuning to tune a process may be inadequate for the control requirement, then you can try manual tuning.
Connect the controller to the process and perform the procedures according to the flow chart shown in the following diagram.

Figure 3.5
Manual Tuning
Procedure

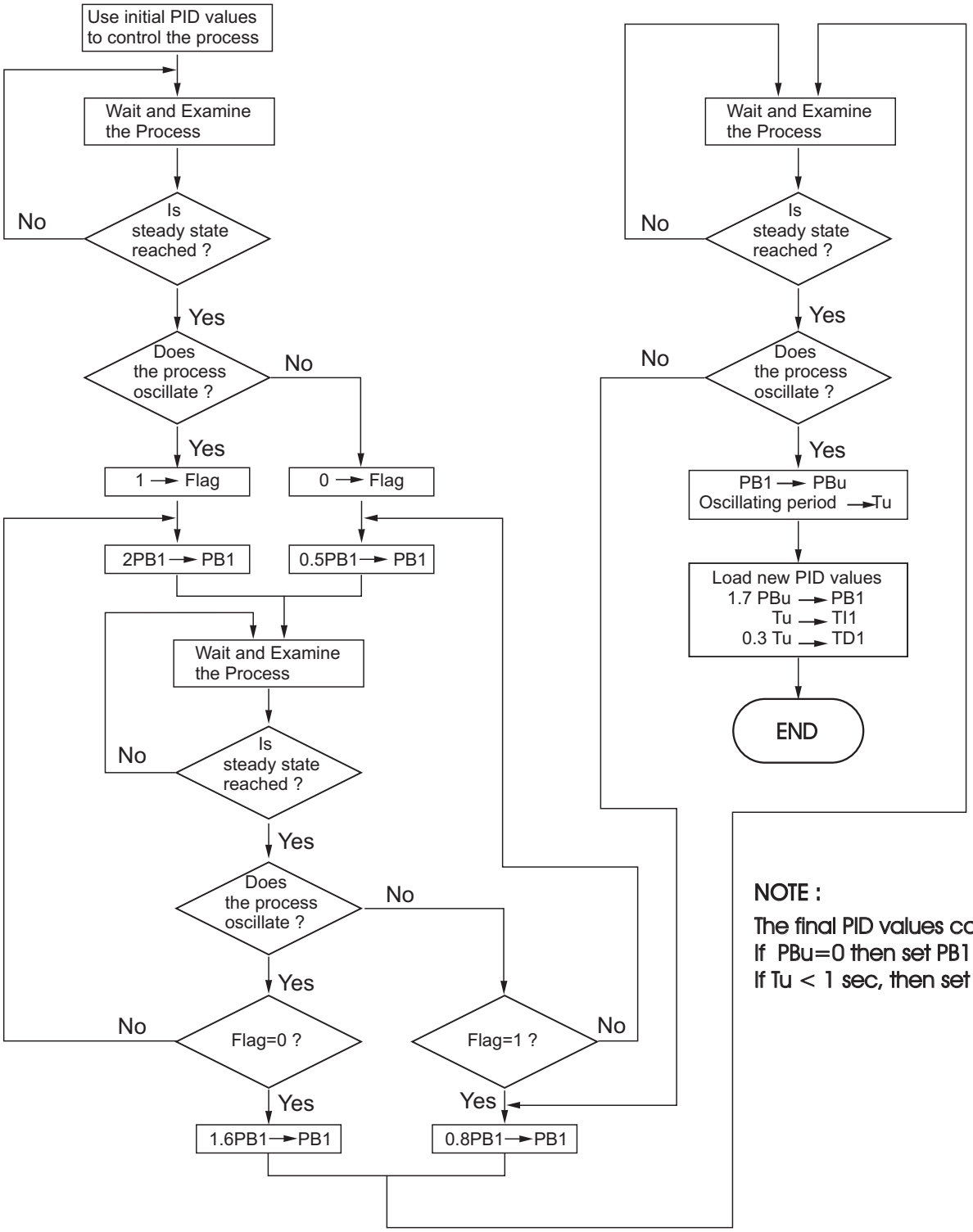

NOTE :

The final PID values can't be zero.
If PBu=0 then set PB1=1.
If Tu < 1 sec, then set TI1=1 sec.

The above procedure may take a long time before reaching a new steady state since the P band was changed. This is particularly true for a slow process. So the above manual tuning procedures will take from minutes to hours to obtain optimal PID values.

The PBu is called the **Ultimate P Band** and the period of oscillation Tu is called the **Ultimate Period** in the flow chart of Figure 3.5 . When this occurs, the process is called in a **critical steady state**. Figure 3.6 shows a critical steady state occasion.

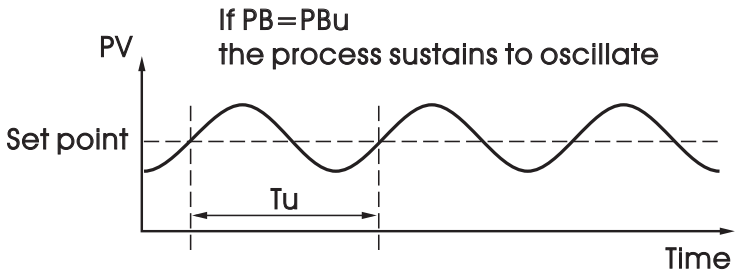

Figure 3.6 Critical Steady State

If the control performance by using above tuning is still unsatisfactory, the following rules can be applied for further adjustment of PID values :

ADJUSTMENT SEQUENCE	SYMPTOM	SOLUTION
(1) Proportional Band (P) PB1 and/or PB2	Slow Response	Decrease PB1 or PB2
	High overshoot or Oscillations	Increase PB1 or PB2
(2) Integral Time (I) TI1 and/or TI2	Slow Response	Decrease TI1 or TI2
	Instability or Oscillations	Increase TI1 or TI2
(3) Derivative Time (D) TD1 and/or TD2	Slow Response or Oscillations	Decrease TD1 or TD2
	High Overshoot	Increase TD1 or TD2

Table 3.2 PID Adjustment Guide

CPB Programming : The cooling proportional band is measured by % of PB with range 1～255. Initially set 100% for CPB and examine the cooling effect. If cooling action should be enhanced then **decrease CPB**, if cooling action is too strong then **Increase CPB**. The value of CPB is related to PB and its value remains unchanged throughout the self-tuning and auto-tuning procedures.

Adjustment of CPB is related to the cooling media used. For air is used as cooling media, adjust CPB at 100(%). For oil is used as cooling media, adjust CPB at 125(%). For water is used as cooling media, adjust CPB at

DB Programming: Adjustment of DB is dependent on the system requirements. If more positive value of DB (greater dead band) is used, an unwanted cooling action can be avoided but an excessive overshoot over the set point will occur. If more negative value of DB (greater overlap) is used, an excessive overshoot over the set point can be minimized but an unwanted cooling action will occur. It is adjustable in the range -36.0% to 36.0 % of Pb1
(or PB2 if PB2 is selected). A negative DB value shows an overlap area over which both outputs are active. A positive DB value shows a dead band area over which neither output is active.

Figure 3.25 shows the effects of PID adjustment on process response.

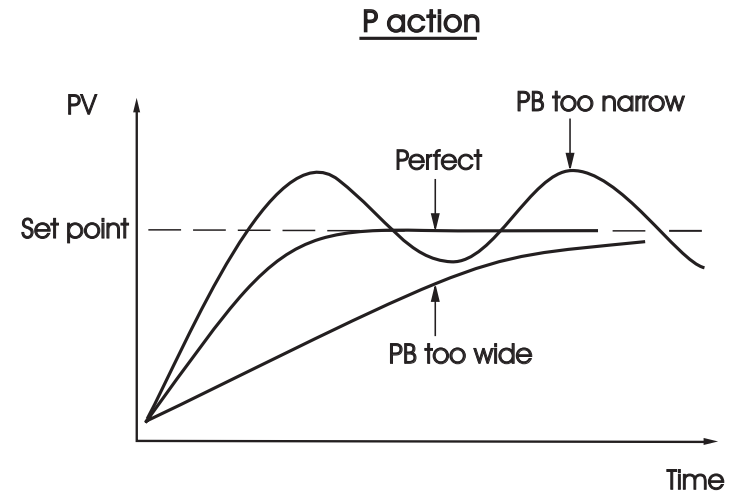

Figure 3.7 Effects of PID Adjustment

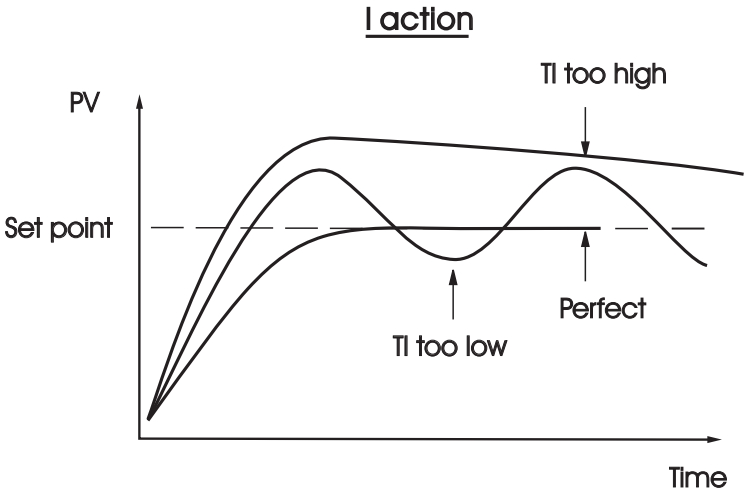

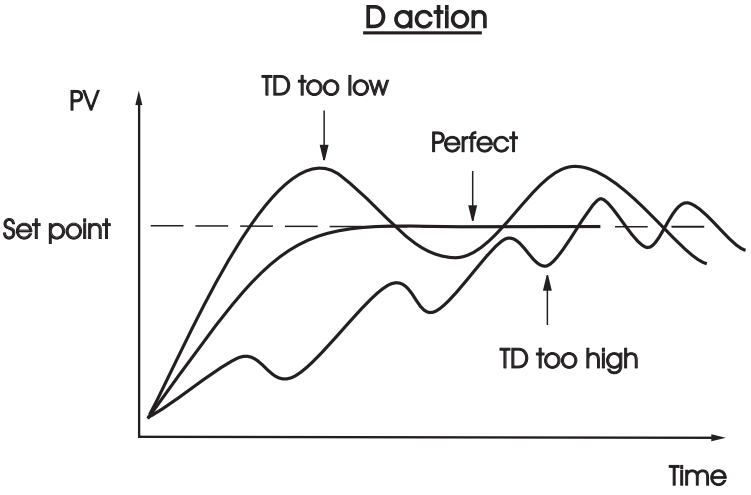

Figure 3.8 (Continued) Effects of PID Adjustment

3–10 Pump Control

PUMP: A Cost Effective yet Perfect Solution

Pump Control function is one of the unique features of FDC-9300. Using this function the pressure in a process can be controlled excellently. The pressure in a process is commonly generated by a pump driven by a variable speed motor. The complete system has the following **characteristics** which affects the control behavior: 1, The system is very noisy. 2, The pressure is changed very rapidly. 3, The pump characteristics is ultra nonlinear with respect to its speed. 4, The pump can't generate any more pressure as its speed is lower than half of its rating speed. 5, An ordinary pump may slowly lose the pressure even if the valves are

Obviously a conventional controller can't fulfill the conditions mentioned above. Only the superior noise rejection capability in addition to the fast sampling rate owned by FDC-9300 can realize such application. To achieve this, set the following parameters in the setup menu:

Key menu

SPMD
SP2F
REFC
SP2

FUNC=FULL
EIFN=NONE
PVMD=PV1
FILT=0.5
SELF=NONE
SPMD=PUMP
SP2F=DEVI

and program the following parameters in the user menu:

REFC= Reference constant
SP2= A negative value is added to SP1 to obtain the set point for idle state

Pump Control Features:

1. Minimum oscillation of pressure
2. Rapidly stabilized
3. Guaranteed pump stop
4. Programmable pump stopping interval

Since the pump can't produce any more pressure at lower speed, the pump may not stop running even if the pressure has reached the set point. If this happens, the pump will be over worn out and waste additional power. To avoid this, the FDC-9300 provides a **Reference Constant** REFC in the user menu. If PUMP is selected for SPMD, the controller will periodically test the process by using this reference constant after the pressure has reached its set point. If the test shows that the pressure is still consumed by the process, the controller will continue to supply appropriate power to the pump. If the test shows that the pressure is not consumed by the process, the controller will gradually decrease the power to the pump until the pump stops running. As this happens, the controller enters **Idle state**. The idle state will use a lower set point which is obtained by adding SP2 to SP1 until the pressure falls below this set point. The idle state is provided for the purpose of preventing the pump from been restarted too frequently. The value of SP2 should be **negative** to ensure a correct function.

The pump functions are summarized as follows:

1. If the process is demanding material (ie. lose pressure), the controller will precisely control the pressure at set point.
2. If the process no longer consumes material, the controller will shut off the pump as long as possible.
3. The controller will restart the pump to control the pressure at set point as soon as the material is demanded again while the pressure falls below a predetermined value (ie. SP1+SP2).

Programming Guide:

1. Perform auto-tuning to the system under such condition that the material (ie. pressure) is exhausted at typical rate. A typical value for PB1 is about 10 Kg/cm^2 , TI1 is about 1 second, TD1 is about 0.2 second.
2. If the process oscillates around set point after auto-tuning, then increase PB1 until the process can be stabilized at set point. The typical value of PB1 is about half to two times of the range of pressure sensor.
3. Increase FILT (Filter) can further reduce oscillation amplitude. But a value of FILT higher than 5 (seconds) is not recommended. A typical value for FILT is 0.5 or 1 .
4. Close the valves and examine that if the controller can shut off the pump each time. The value of REFC is adjusted as small as possible so that the controller can shut off the pump each time when all the valves are closed. A typical value for REFC is between 3 and 5.
5. An ordinary pump may slowly lose the pressure even if the valves are completely closed. Adjust SP2 according to the rule that a more negative value of SP2 will allow the pump to be shut off for a longer time as the valves are closed. A typical value for SP2 is about -0.50 Kg/cm^2 .

3–11 Sleep Mode

To Enter Sleep Mode:
FUNC selects FULL to provide full function.
SLEP selects YES to enable the sleep mode.
Press ⩓ ⩔ for 3 seconds, the unit will enter its sleep mode.
During sleep mode:

(1) Shut off all display except a decimal point which is lit periodically.
(2) Shut off all outputs and alarms.

To Exit Sleep Mode:
(1) Press ⩓ ⩔ to leave the sleep mode.
(2) Disconnect the power.

Sleep Function can be used to replace a **power switch** to reduce the system cost.

Note: If the Sleep mode is not required by your system, the SLEP should select NONE to disable sleep mode against undesirable occurrence.

Sleep Mode Features:

Shut off display
Shut off outputs
Green Power
Replace Power Switch

Setup Menu

FUNC=FULL
SLEP=YES

Default: SLEP=NONE,
Sleep mode is disabled.

3–12 Remote Lockout

The parameters can be locked to prevent from being changed by using either Hardware Lockout (see Section 1-3) or Remote Lockout or both. If you need the parameters to be locked by using an external switch (remote lockout function), then connect a switch to terminals 13 and 14 and choose LOCK for EIFN.

If remote lockout is configured, all parameters will be locked as the external switch is closed. When the switch is left open, the lockout condition is determined by internal DIP switch (hardware lockout, see

Hardware Lockout: Can be used only during initial setup.
Remote Lockout: Can be used any time.

Remote Lockout:

1.Connect external switch to terminal ⑬ and ⑭.
2. Set **LOCK** for **EIFN**
3. Lock all parameters

3–13 Heater Break Alarm

A current transformer (parts No. CT94-1) should be installed to detect the heater current if a heater break alarm is required. The CT signal is sent to input 2, and the PV2 will indicate the heater current in 0.1 Amp. resolution. The range of current transformer is 0 to 50.0 Amp.

Heater Break Alarm 1
Setup : IN2 = CT
A1FN = PV2.L
A1MD = NORM
A1HY = 0.1
Adjust : A1SP
Trigger levels : A1SP A1/2 A1HY

Heater Break Alarm 2
Setup : IN2 = CT
A2FN = PV2.L
A2MD = NORM
A2HY = 0.1
Adjust : A2SP
Trigger levels : A2SP A1/2 A2HY

Example:
A furnace uses two 2KW heaters connected in parallel to warm up the process. The line voltage is 220V and the rating current for each heater is 9.09A. If we want to detect any one heater break, set A1SP=13.0A, A1HY=0.1 A1FN=PV2.L, A1MD=NORM, then

Limitations :
1. Linear output can't use heater break alarm.
2. CYC1 should use 1 second or longer to detect heater current reliably.

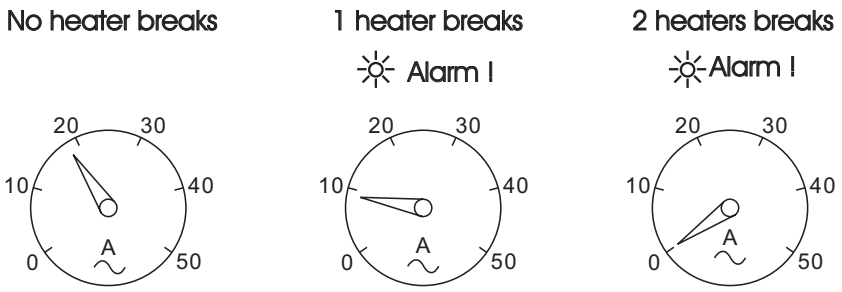

Figure 3.9
Heater Break Alarm

3–14 Reload Default Values

The default values listed in Table 1.4 are stored in the memory as the product leaves the factory. In certain occasions it is desirable to retain these values after the parameter values have been changed. Here is a convenient tool to reload the default values.

Operation

Press [↵] [⌄] several times until [dEFt] [----] . Then press [↵] . The upper display will show [F,LE] .Use up-down key to select 0 to 1. If C unit is required, select 0 for FILE and if F unit is required, select 1 for FILE. Then Press f [↵] for at least 3 seconds. The display will flash a moment and the default values are reloaded.

FILE 0
C Default File

FILE 1
F Default File

CAUTION

The procedures mentioned above will change the previous setup data. Before doing so, make sure that if it is really required.

Chapter 4 Calibration

⚠ Do not proceed through this section unless there is a definite need to re-calibrate the controller. Otherwise, all previous calibration data will be lost. Do not attempt recalibration unless you have appropriate calibration equipment. If calibration data is lost, you will need to return the controller to your supplier who may charge you a service fee to re-calibrate the controller.

⚠ Entering calibration mode will break the control loop. Make sure that if the system is allowable to apply calibration mode.

Equipment needed before calibration:

(1) A high accuracy calibrator (Fluke 5520A Calibrator recommended) with following functions:
   0 - 100 mV millivolt source with +/-0.005 % accuracy
   0 - 10 V voltage source with +/-0.005 % accuracy
   0 - 20 mA current source with +/-0.005 % accuracy
   0 - 300 ohm resistant source with +/-0.005 % accuracy
(2) A test chamber providing 25 C - 50 C temperature range
(3) A switching network (SW6400, optional for automatic calibration)
(4) A calibration fixture equipped with programming units (optional for automatic calibration)
(5) A PC installed with calibration software FD-Net and Smart Network Adaptor SNA10B (optional for automatic calibration)

The calibration procedures described in the following section are a step by step manual procedures.

ATTENTION: A unit requires a 20 minute warm up BEFORE Calibration can be Initiated.

Manual Calibration Procedures

* Perform step 1 to ENTER calibration mode.

Step 1. Set the lockout DIP switch to the unlocked condition (both switches 3 and 4 are off).Dip switches must be set correctly for calibration performed.

*Press both the scroll key and down keys simultaneously and release them quickly. [SEt] Will appear on the top display. [----] In the bottom display. Continue to press the scroll and down arrow keys simultaneously until [CAL] appears on the top display. Then press and hold the scroll key only for at least 5 seconds and release the key. The top Display should now show [AdO] You have now entered into the calibration mode. You can now begin with ADO calibration routine or use the scroll key to advance to the calibration required. NOTE: Outputs now transfer to there failure transfer mode values.

Perform step 2 to calibrate Zero of A to D converter and step 3 to calibrate gain of A to D converter. The DIP switch is set for T/C input.

Step 2. With [AdO] on the display short terminals12 and 13 , then press scroll key for at least 5 seconds and release scroll key. The display will blink a moment and a new value is obtained. Otherwise, if the display didn't blink or if the obtained value is equal to -360 or 360, then the calibration fails.

DIP Switch Position

T/C input

Step 3. Press scroll key until the display shows [AdC] . Simulate a 60mV signal to terminals 12 and 13 in correct polarity . Press scroll key for at least 5 seconds then release scroll key. The display will blink a moment and a new value is obtained . Otherwise , if the display didn't blink or if the obtained value is equal to -199.9 or 199.9, then the calibration fails.

*

Perform step 4 to calibrate voltage function (if required) for input 1.

Step 4. Change the DIP switch for the Voltage input. Press scroll key until the display shows [0 10] . Send a 10 V signal to terminals 12 and 13 in correct polarity. Press scroll key for at least 5 seconds then release scroll key. The display will blink a moment and a new value is obtained . Otherwise, if the display didn't blink or if the obtained value is equal to -199.9 or 199.9 , then the calibration fails.

DIP Switch Position

0–10V input

* Perform both steps 5 and 6 to calibrate RTD function (if required) for input 1.

Step 5. Change the DIP switch for the RTD input . Press scroll key until the display shows [rEF.1] . Send a 100 ohms signal to terminals 11, 12 and 13 according to the connection shown below:

DIP Switch Position

RTD input

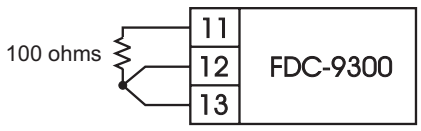

Figure 4.1
RTD Calibration

Press the scroll key for at least 5 seconds then release scroll key. The display will blink a moment, otherwise the calibration fails.

Step 6. Press the scroll key and the display will show [Sr.1] . Change the simulated ohm's value to 300 ohms .Press scroll key for at least 5 seconds and release scroll key. The display will blink a moment and two values are obtained for SR1and REF1 (last step). Otherwise, if the display didn't blink or if any value obtained for SR1 and REF1 is equal to -199.9 or 199.9 , then the calibration fails.

* Perform step 7 to calibrate **mA** function (if required) for input 1.

Step 7. Change the DIP switch for mA input. Press the scroll key until the display shows [mA 1.0] .Simulate a 20 mA signal to terminals 12 and 13 in correct polarity. Press scroll key for at least 5 seconds and release scroll key. The display will blink a moment and a new value is obtained . Otherwise , if the display didn't blink or if the obtained value is equal to -199.9 or 199.9,then the calibration fails.

DIP Switch Position

mA Input

* Perform step 8 to calibrate **voltage** as well as CT function (if required) for input 2.

Step 8. Press scroll key until the display shows [V2.0]. Simulate a 10 V signal to terminals 15 and 16 in correct polarity. Press scroll key for at least 5 seconds and release the scroll key. The display will blink a moment and a new value is obtained . Otherwise , if the display didn't blink or if the obtained value is equalto -199.9 or 199.9 , then the calibration fails.

* Perform step 9 to calibrate **mA** function (if required) for input 2.

Step 9. Press scroll key until the display shows [mA2.0] . Simulate a 20 mA signal to terminal 15 and 16 in correct polarity. Press scroll key for at least 5 seconds and release the scroll key. The display will blink a moment and a new value is obtained . Otherwise , if the display didn't blink or if the obtained value is equal to -199.9 or 199.9, then the calibration fails.

* Perform step 10 to calibrate **offset** of **cold junction** compensation, if required. The DIP switch is set for T/C input.

Step 10. Setup the equipment according to the following diagram for calibrating the cold junction compensation. Note that a K type thermocouple must be used. The programming for the controller input and units can be any T/C type and set for F or C. Input type programming does bot effect the cold junction calibration procedure.

DIP Switch Position

TC Input

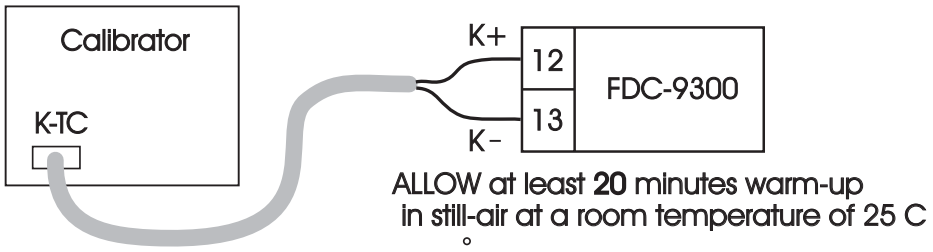

ALLOW at least **20** minutes warm-up in still-air at a room temperature of 25 C°

The calibrator MUST be set for K type thermocouple output with internal compensation. Simulate a 0.00 C signal to unit under calibration.

Figure 4.2 Cold Junction Calibration Setup

Perform step 1 as stated to enter into calibration mode.
Press the scroll key until [CJt.L]
With [CJt.L] on the display and simulator simulating the K t/c, 0.00 C degree input signal, use the up/down keys until value 0.00 is obtained . Then press and hold scroll key at least 5 seconds and release the scroll key. The display will blink a moment and a new value is obtained . Otherwise , if the display didn't blink or if the obtained value is equal to -5.00 or 40.00, then the calibration fails.

* Perform step 11 to calibrate High temp **gain** of **cold junction** compensation if required, otherwise , perform step 11N to use a nominal value for the cold junction gain if a **test chamber** for calibration is **not available**.

Step 11. Setup the equipments same as step 10. The unit under calibration is powered in a still-air room with temperature **50 C**. Allow at least 20 minutes for warming up at the 50 C ambient. °
The calibrator source is set at 0.00 C with internal compensation mode.

Perform step 1 stated above , then press scroll key until the display shows [CJG]. Apply up/down key until value 0.0 is obtained. Press scroll key for at least 5 seconds and release scroll key. The display will blink a moment and a new value is obtained. Otherwise , if the display didn't blink or if the obtained value is equal to -199.9 or 199.9, then the calibration fails.

This setup is performed in a **high temperature chamber**, hence it is recommended to use an automated test fixture to perform.

* Final step

Step 12. Set the DIP switch to your desired position (refer to **section 1-3**) after performing any or all require calibrations.

Chapter 5 Error Codes & Troubleshooting

⚠ This procedure requires access to the circuitry of a live power unit. Dangerous accidental contact with line voltage is possible. Only qualified personnel are allowable to perform these procedures. Potentially lethal voltages are present.

Troubleshooting Procedures :

(1) If an error message is displayed, refer to **Table 5.1** to see what cause it is and apply a corrective action to the failure unit.

(2) Check each point listed below. Experience has proven that many control problems are caused by a defective instrument.

- ✱ Line wires are improperly connected
- ✱ No voltage between line terminals
- ✱ Incorrect voltage between line terminals
- ✱ Connections to terminals are open, missing or loose
- ✱ Thermocouple is open at tip
- ✱ Thermocouple lead is broken
- ✱ Shorted thermocouple leads
- ✱ Short across terminals
- ✱ Open or shorted heater circuit
- ✱ Open coil in external contactor
- ✱ Burned out line fuses
- ✱ Burned out relay inside control
- ✱ Defective solid-state relays
- ✱ Defective line switches
- ✱ Burned out contactor
- ✱ Defective circuit breakers

(3) If the points listed on the above chart have been checked and the controller does not function properly, it is suggested that the instrument be returned to the factory for inspection.
Do not attempt to make repairs without qualified engineer and proper technical information . It may create costly damage. Also , it is advisable to use adequate packing materials to prevent damage in transportation.

(4) Dismantle the controller according to **Figure 5.1** .
Refer to **Table 5.2** for some probable causes and actions.

① Press both sides of the latch located on rear terminal block.Hold tightly and remove the terminal block from the housing.

② Expand the rear edge of the housing by using a tool. Pull out the PCB from the housing.

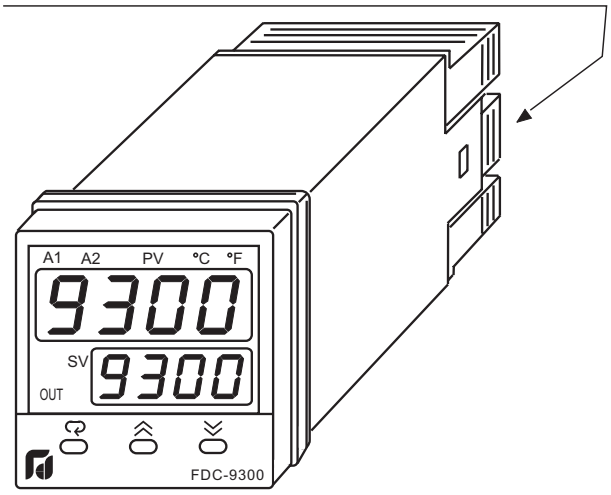

Figure 5.1

Dismantling the Controller

Table 5.1 Error Codes and Corrective Actions

Error Code	Display Symbol	Error Description	Corrective Action
1	Er01	Illegal setup values been used: PV1 is used for both PVMD and SPMD. It is meaningless for control.	Check and correct setup values of PVMD and SPMD. PV and SV can't use the same value for normal control
2	Er02	Illegal setup values been used: PV2 is used for both PVMD and SPMD. It is meaningless for control	Same as error code 1
3	Er03	Illegal setup values been used: P1-2 or P2-1 is used for PVMD while PV1 or PV2 is used for SPMD. Dependent values used for PV and SV will create incorrect result of control	Check and correct setup values of PVMD and SPMD. Difference of PV1 and PV2 can't be used for PV while PV1 or PV2 is used for SV
4	Er04	Illegal setup values been used: Before COOL is used for OUT2, DIRT (cooling action) has already been used for OUT1, or PID mode is not used for OUT1 (that is PB1 or PB2 = 0, and TI1 or TI2 = 0)	Check and correct setup values of OUT2, PB1, PB2, TI1, TI2 and OUT1. IF OUT2 is required for cooling control, the control should use PID mode (PB = 0, TI = 0) and OUT1 should use reverse mode (heating action), otherwise, don't use OUT2 for cooling control
5	Er05	Illegal setup values been used: unequal IN1U and IN2U or unequal DP1 and DP2 while P1-2 or P2-1 is used for PVMD or, PV1 or PV2 is used for SPMD or, P1.2.H, P1.2.L, D1.2.H or D1.2.L are used for A1FN or A2FN.	Check and correct setup values of IN1U, IN2U, DP1, DP2, PVMD, SPMD, A1FN or A2FN. Same unit and decimal point should be used if both PV1 and PV2 are used for PV, SV, alarm 1 or alarm 2.
6	Er06	Illegal setup values been used: OUT2 select =AL2 but A2FN select NONE	Check and correct setup values of OUT2 and A2FN. OUT2 will not perform alarm function if A2FN select NONE.
7	Er07	Illegal setup values been used: Dwell timer (TIMR) is selected for both A1FN and A2FN.	Check and correct setup values of A1FN and A2FN. Dwell timer can only be properly used for single alarm output.
10	Er 10	Communication error: bad function code	Correct the communication software to meet the protocol requirements.
11	Er 11	Communication error: register address out of range	Don't issue an over-range register address to the slave.
12	Er 12	Communication error: access a non-existent parameter	Don't issue a non-existent parameter to the slave.
14	Er 14	Communication error: attempt to write a read-only data	Don't write a read-only data or a protected data to the slave.
15	Er 15	Communication error: write a value which is out of range to a register	Don't write an over-range data to the slave register.
26	AtEr	Fail to perform auto-tuning function	1.The PID values obtained after auto-tuning procedure are out of range. Retry auto-tuning. 2.Don't change set point value during auto-tuning procedure. 3. Don't change Event input state during auto-tuning procedure. 4.Use manual tuning instead of auto-tuning.
29	EEPE	EEPROM can't be written correctly	Return to factory for repair.
38	Sb2E	Input 2 (IN2) sensor break, or input 2 current below 1 mA if 4-20 mA is selected, or input 2 voltage below 0.25V if 1 - 5V is selected	Replace input 2 sensor.
39	Sb 1E	Input 1 (IN1) sensor break, or input 1 current below 1 mA if 4-20 mA is selected, or input 1 voltage below 0.25V if 1 - 5V is selected	Replace input 1 sensor.
40	AdEr	A to D converter or related component(s) malfunction	Return to factory for repair.

Table 5.2 Common Failure Causes and Corrective Actions

Symptom	Probable Causes	Corrective Actions
1) Keypad no function	-Bad connection between PCB & keypads	- Clean contact area on PCB - Replace keypads
2) LED's will not light	- No power to instrument - Power supply defective	- Check power line connections - Replace power supply board
3) Some segments of the display or LED lamps not lit or lit erroneously.	- LED display or LED lamp defective - Related LED driver defective	- Replace LED display or LED lamp - Replace the related transistor or IC chip
4) Display Unstable	- Analog portion or A-D converter defective - Thermocouple, RTD or sensor defective - Intermittent connection of sensor wiring	- Replace related components or board - Check thermocouple, RTD or sensor - Check sensor wiring connections
5) Considerable error in temperature indication	- Wrong sensor or thermocouple type, wrong input mode selected. - Analog portion of A-D converter defective	- Check sensor or thermocouple type and if proper input mode was selected - Replace related components or board
6) Display goes in reverse direction (counts down scale as process warms)	- Reversed input wiring of sensor	- Check and correct
7) No heat or output	- No heater power (output), incorrect output device used - Output device defective - Open fuse outside of the instrument	- Check output wiring and output device - Replace output device - Replace output fuse
8) Heat or output stays on but indicator reads normal	- Output device shorted, or power service shorted	- Check and replace
9) Control abnormal or operation incorrect	- CPU or EEPROM (non-volatile memory) defective. Key switch defective - Incorrect setup values	- Check and replace - Read the setup procedure carefully
10) Display blinks; entered values change by themselves	- Electromagnetic interference (EMI), or Radio Frequency interference (RFI) - EEPROM defective	- Suppress arcing contacts in system to eliminate high voltage spike sources. Separate sensor and controller wiring from " dirty " power lines, ground heaters - Replace EEPROM

Chapter 6 Specifications

Power

90– 264 VAC, 47– 63 Hz, 15VA, 7W maximum
11– 26 VAC / VDC, 15VA, 7W maximum

Input 1

Resolution : 18 bits
Sampling Rate : 5 times / second
Maximum Rating : -2 VDC minimum, 12 VDC maximum
(1 minute for mA input)
Temperature Effect : +/-0.005 % of reading / C
Sensor Lead Resistance Effect :
T/C: 0.2uV/ohm
3-wire RTD: 2.6 C/ohm of resistance difference of two leads
2-wire RTD: 2.6 C/ohm of resistance sum of two leads
Burn-out Current : 200 nA
Common Mode Rejection Ratio (CMRR): 120dB

Sensor Break Detection :

Sensor open for TC, RTD and mV inputs,
below 1 mA for 4-20 mA input,
below 0.25V for 1 - 5 V input,
unavailable for other inputs.

Sensor Break Responding Time :

Within 4 seconds for TC, RTD and mV inputs,
0.1 second for 4-20 mA and 1 - 5 V inputs.

Characteristics:

Type	Range	Accuracy @ 25 °C	Input Impedance
J	-120°C– 1000°C (-184°F –1832° F)	+/-2 C	2.2 MΩ
K	-200°C– 1370° C (-328°F– 2498° F)	+/-2 C	2.2 MΩ
T	-250°C– 400°C (-418°F– 752° F)	+/-2 C	2.2 MΩ
E	-100°C– 900°C (-148°F –1652° F)	+/-2 C	2.2 MΩ
B	0°C– 1820°C (- 32°F –3308° F)	+/-2 C (200°C– 1820°C)	2.2 MΩ
R	0°C– 1767.8°C (- 32°F –3214° F)	+/-2 C	2.2 MΩ
S	0°C– 1767.8°C (- 32°F –3214° F)	+/-2 C	2.2 MΩ
C	0 C° 2300 C° (32 F° 4200 F°)	+/-2 C	2.2 MΩ
P	0 C° 1395 C° (32 F° 2543 F°)	+/-2 C	2.2 MΩ
PT100 (DIN)	-210°C– 700°C (-346°F –1292° F)	+/-0.4 C	1.3 KΩ
PT100 (JIS)	-200°C– 600°C (-328°F –1112° F)	+/-0.4 C	1.3 KΩ
mV	-8mV– 70mV	+/-0.05 %	2.2 MΩ
mA	-3mA– 27mA	+/-0.05 %	70.5Ω
V	-1.3V– 11.5V	+/-0.05 %	302 KΩ

Input 2

Resolution : 18 bits
Sampling Rate : 2 times / second
Maximum Rating : -2 VDC minimum, 12 VDC maximum
Temperature Effect : +/-0.005 % of reading / C
Common Mode Rejection Ratio (CMRR): 120dB

Sensor Break Detection :

Below 1 mA for 4-20 mA input,
below 0.25V for 1 - 5V input,
unavailable for other inputs.

Sensor Break Responding Time : 0.5 second

Characteristics:

Type	Range	Accuracy @ 25 °C	Input Impedance
CT94-1	0– 50.0 A	+/-2 % of Reading +/-0.2 A	302 KΩ
mA	-3mA–27mA	+/-0.05 %	$70.5\Omega + \frac{0.8V}{\text{input current}}$
V	-1.3V– 11.5V	+/-0.05 %	302 KΩ

Input 3 (Event Input)

Logic Low : -10V minimum, 0.8V maximum.
Logic High : 2V minimum, 10V maximum
External pull-down Resistance : 400 KΩ maximum
External pull-up Resistance : 1.5 MΩ minimum
Functions : Select second set point and/or PID,
reset alarm 1 and/or alarm 2,
disable output 1 and/or output 2,
remote lockout.

Output 1 / Output 2

Relay Rating : 2A/240 VAC, life cycles 200,000 for resistive load
Pulsed Voltage : Source Voltage 5V,
current limiting resistance 66 Ω.

Linear Output Characteristics

Type	Zero Tolerance	Span Tolerance	Load Capacity
4-20 mA	3.8-4 mA	20-21 mA	500Ω max.
0-20 mA	0 mA	20-21 mA	500Ω max.
0– 5 V	0 V	5 – 5.25 V	10 KΩ min.
1– 5 V	0.95– 1 V	5 – 5.25 V	10 KΩ min.
0 –10 V	0 V	10 –10.5 V	10 KΩ min.

Linear Output

Resolution : 15 bits
Output Regulation : 0.01 % for full load change
Output Settling Time : 0.1 sec. (stable to 99.9 %)
Isolation Breakdown Voltage : 1000 VAC
Temperature Effect : +/-0.0025 % of SPAN / LC

Triac (SSR) Output

Rating : 1A / 240 VAC
Inrush Current : 20A for 1 cycle
Min. Load Current : 50 mA rms
Max. Off-state Leakage : 3 mA rms
Max. On-state Voltage : 1.5 V rms
Insulation Resistance : 1000 Mohms min. at 500 VDC
Dielectric Strength : 2500 VAC for 1 minute

DC Voltage Supply Characteristics (Installed at Output 2)

Type	Tolerance	Max. Output Current	Ripple Voltage	Isolation Barrier
20 V	+/-0.5 V	25 mA	0.2 Vp-p	500 VAC
12 V	+/-0.3 V	40 mA	0.1 Vp-p	500 VAC
5 V	+/-0.15 V	80 mA	0.05 Vp-p	500 VAC

Alarm 1/ Alarm 2

Alarm 1 Relay : Form A or Form B, Max. Rating 2A/240VAC, life cycles 100,000 for resistive load.
Alarm 2 Relay : Form A, Max. rating 2A/240VAC, life cycles 200,000 for resistive load.
Alarm Functions : Dwell timer,
Deviation High / Low Alarm,
Deviation Band High / Low Alarm,
PV1 High / Low Alarm,
PV2 High / Low Alarm,
PV1 or PV2 High / Low Alarm,
PV1-PV2 High / Low Alarm,
Loop Break Alarm,
Sensor Break Alarm.
Alarm Mode : Normal, Latching, Hold, Latching / Hold.
Dwell Timer : 0 - 6553.5 minutes

Data Communication

Interface : RS-232 (1 unit), RS-485 (up to 247 units)
Protocol : Modbus Protocol RTU mode
Address : 1 - 247
Baud Rate : 0.3 ~ 38.4 Kbits/sec
Data Bits : 7 or 8 bits
Parity Bit : None, Even or Odd
Stop Bit : 1 or 2 bits
Communication Buffer : 50 bytes

Analog Retransmission

Functions : PV1, PV2, PV1-PV2, PV2-PV1, Set Point, MV1, MV2, PV-SV deviation value
Output Signal : 4-20 mA, 0-20 mA, 0 - 1V, 0 - 5V, 1 - 5V, 0 - 10V
Resolution : 15 bits
Accuracy : +/-0.05 % of span +/-0.0025 % / C
Load Resistance :
0 - 500 ohms (for current output)
10 K ohms minimum (for voltage output)
Output Regulation : 0.01 % for full load change
Output Settling Time : 0.1 sec. (stable to 99.9 %)
Isolation Breakdown Voltage : 1000 VAC min.
Integral Linearity Error : +/-0.005 % of span
Temperature Effect : +/-0.0025 % of span/ C
Saturation Low : 0 mA (or 0V)
Saturation High : 22.2 mA (or 5.55V, 11.1V min.)
Linear Output Range : 0-22.2mA(0-20mA or 4-20mA)
0-5.55V (0 - 5V, 1 - 5V)
0 - 11.1 V (0 - 10V)

User Interface

Dual 4-digit LED Displays : Upper 0.4" (10 mm), Lower 0.3 " (8 mm)
Keypad : 3 keys
Programming Port : For automatic setup, calibration and testing
Communication Port : Connection to PC for supervisory control

Control Mode

Output 1 : Reverse (heating) or direct (cooling) action
Output 2 : PID cooling control, cooling P band 1~ 255% of PB
ON-OFF : 0.1 - 100.0 (LF) hysteresis control (P band = 0)
P or PD : 0 - 100.0 % offset adjustment
PID : Fuzzy logic modified
Proportional band 0.1 ~ 900.0 F.
Integral time 0 - 1000 seconds
Derivative time 0 - 360.0 seconds
Cycle Time : 0.1 - 100.0 seconds
Manual Control : Heat (MV1) and Cool (MV2)
Auto-tuning : Cold start and warm start
Self-tuning : Select None and YES
Failure Mode : Auto-transfer to manual mode while sensor break or A-D converter damage
Sleep Mode : Enable or Disable
Ramping Control : 0 - 900.0 F/minute or 0 - 900.0 F/hour ramp rate
Power Limit : 0 - 100 % output 1 and output 2
Pump / Pressure Control : Sophisticated functions provided
Adaptive Heat-Cool Dead Band : Self adjustment
Remote Set Point : Programmable range for voltage or current input
Differential Control : Control PV1-PV2 at set point

Digital Filter

Function : First order
Time Constant : 0, 0.2, 0.5, 1, 2, 5, 10, 20, 30, 60 seconds programmable

Environmental & Physical

Operating Temperature : -10° C to 50° C
Storage Temperature : -40° C to 60° C
Humidity : 0 to 90 % RH (non-condensing)
Insulation Resistance : 20 Mohms min. (at 500 VDC)
Dielectric Strength : 2000 VAC, 50/60 Hz for 1 minute
Vibration Resistance : 10 - 55 Hz, 10 m/s^2 for 2 hours
Shock Resistance : 200 m/s^2 (20 g)
Moldings : Flame retardant polycarbonate
Dimensions :50.7mm(W) X 50.7mm(H) X 88.0mm(D),
75.0 mm depth behind panel
Weight : 150 grams

Approval Standards

UL/ cUL **File # E197216** - QUYX-QUYX7
CE EN1010-1 (IEC1010-1)
RoHS Compliant

Protective Class:
NEMA 4x (UL/cUL tested for mounting in a vertical position on a flat surface of a NEMA 4X enclosure

The color code typically used on the thermocouple extension leads are shown in below

Thermocouple Cable Color Codes

Thermocouple Type	Cable Material	British BS	American ASTM	German DIN	French NFE
T	Copper (Cu) Constantan (Cu-Ni)	+ white – blue * blue	+ blue – red * blue	+ red – brown * brown	+ yellow – blue * blue
J	Iron (Fe) Constantan (Cu- Ni)	+ yellow – blue * black	+ white – red * black	+ red – blue * blue	+ yellow – black * black
K	Nickel-Chromium (Ni-Cr) Nickel-Aluminum (Ni-Al)	+ brown – blue * red	+ yellow – red * yellow	+ red – green * green	+ yellow – purple * yellow
R S	Pt-13%Rh,Pt Pt-10%Rh,Pt	+ white – blue * green	+ black – red * green	+ red – white * white	+ yellow – green * green
B	Pt-30%Rh Pt-6%Rh	Use Copper Wire	+grey – red * grey	+red –grey * grey	Use Copper Wire

* Color of overall sheath

A–1 Menu Existence Conditions

Menu Existence Conditions Table (1/3)

Menu	Parameter Notation	Existence Conditions	Your Settings
User Menu	SP1	Exists unconditionally	
	TIME	Exists if A1FN selects TIMR or A2FN selects TIMR	
	A1SP	Exists if A1FN selects PV1H, PV1L, PV2H, PV2L, P12H, P12L, D12H or D12L	
	A1DV	Exists if A1FN selects DEHI, DELO, DBHI, or DBLO	
	A2SP	Exists if A2FN selects PV1H, PV1L, PV2H, PV2L, P12H, P12L, D12H or D12L	
	A2DV	Exists if A2FN selects DEHI, DELO, DBHI, or DBLO	
	RAMP	Exists if SPMD selects MINR or HRR	
	OFST	Exists if TI1 is used for control (depends on Event input and EIFN selection) but TI1 = 0 and PB1 ≠ 0 or if TI2 is used for control (depends on Event input and EIFN selection) but TI2 = 0 and PB2 ≠ 0	
	REFC	Exists if SPMD selects PUMP	
	SHIF PB1	Exists unconditionally	
	TI1 TD1	Exists if PB1 = /0	
	CPB	Exists if OUT2 select COOL	
	db	Heat / Cool Dead Band, Negative Value = Overlap, Low -36%, High +36% Default = 0	
	SP2	Exists if EIFN selects SP2 or SPP2, or if SPMD selects PUMP	
	PB2	Exists if EIFN selects PID2 or SPP2	
	TI2 TD2	Exists if EIFN selects PID2 or SPP2 provided that PB2 = /0	
	O1HY	If PID2 or SPP2 is selected for EIFN, then O1HY exists if PB1 = 0 or PB2 = 0. If PID2 or SPP2 is not selected for EIFN, then O1HY exists if PB1 = 0	
	A1HY	Exists if A1FN selects DEHI, DELO, PV1H, PV1L, PV2H, PV2L, P12H, P12L, D12H, or D12L	
	A2HY	Exists if A2FN selects DEHI, DELO, PV1H, PV1L, PV2H, PV2L, P12H, P12L, D12H, or D12L	
	PL1	If PID2 or SPP2 is selected for EIFN, then PL1 exists if PB1 = Ø or PB2 = Ø. If PID2 or SPP2 is not selected for EIFN, then PL1 exists if PB1 = /0	
	PL2	Exists if OUT2 selects COOL	

Menu Existence Conditions Table (continued 2/3)

Menu	Parameter Notation		Your Settings
Setup Menu	FUNC	Exists unconditionally	
	COMM	Exists if FUNC selects FULL	
	PROT ADDR BAUD DATA PARI STOP	Exists if COMM selects 485 or 232	
	AOFN	Exists if COMM selects 4-20, 0-20, 0-1V, 0-5V, 1-5V, or 0-10	
	AOLO AOHI	Exists if COMM selects 4-20, 0-20, 0-1V, 0-5V, 1-5V, or 0-10 and AOFN is not MV1 and MV2	
	IN1 IN1U DP1	Exists unconditionally	
	IN1L IN1H	Exists if IN1selects 4-20, 0-20, 0-1V, 0-5V, 1-5V, or 0-10	
	IN2	Exists if FUNC selects FULL	
	IN2U DP2 IN2L IN2H	Exists if IN2 selects 4-20, 0-20, 0-1V, 0-5V, 1-5V, or 0-10	
	OUT1 O1TY CYC1 O1FT OUT2	Exists unconditionally	
	O2TY CYC2 O2FT	Exists if OUT2 selects COOL	

Menu Existence Conditions Table (continued 3/3)

Menu	Parameter Notation	Existence Conditions	Your Settings
Setup Menu	A1FN	Exists unconditionally	
	A1MD	Exists if A1FN selects DEHI, DELO, DBHI, DBLO, PV1H, PV1L, PV2H, PV2L, P12H, P12L, D12H, D12L, LB or SENB	
	A1FT	Exists if A1FN is not NONE	
	A2FN	Exists unconditionally	
	A2MD	Exists if A2FN selects DEHI, DELO, DBHI, DBLO, PV1H, PV1L, PV2H, PV2L, P12H, P12L, D12H, D12L, LB or SENB	
	A2FT	Exists if A2FN is not NONE	
	EIFN PVMD FILT	Exists if FUNC selects FULL	
	SELF	Exists unconditionally	
	SLEP SPMD	Exists if FUNC selects FULL	
	SP1L SP1H	Exists unconditionally	
	SP2F	Exists if EIFN selects SP2 or SPP2, or if SPMD selects PUMP	
	SEL1 SEL2 SEL3 SEL4 SEL5	Exists unconditionally	

A– 2 Warranty

WARRANTY

Future Design Controls products described in this manual are warranted to be free from functional defects in materials and workmanship at the time the products leave Future Design Controls Facilities and to conform at that time to the specifications set forth in the relevant Future Design Controls manual, sheet or sheets for a period of 3 years after delivery to the first purchaser for use.

There are no expressed or implied Warranties extending beyond the Warranties herein and above set forth.

Limitations:

Future Design Controls provides no warranty or representations of any sort regarding the fitness of use or application of its products by the purchaser. Users are responsible for the selection, suitability of the products for their application or use of Future Design Controls products.

Future Design Controls shall not be liable for any damages or losses, whether direct, indirect, incidental, special, consequential or any damages, costs or expenses excepting only the cost or expense of repair or replacement of Future Design Controls products as described below.

Future Design Controls sole responsibility under the warranty, at Future Design Controls option, is limited to replacement or repair, free of charge or refund of purchase price within the warranty period specified. The warranty does not apply to damage resulting from transportation, alteration, misuse or abuse.

Future Design Controls reserves the right to make changes without notification to purchaser to materials or processing that does not effect the compliance with any applicable specifications.

Return Material Authorization:

Contact Future Design Controls for a Return Authorization Number prior to returning any product to our facility.

State of California Proposition 65 Warning

Cancer and Reproductive Harm: This warning is intended to address certain Prop 65 chemicals that may be found in Future Design Controls products. These products can expose you to chemicals including lead and lead compounds which are known to the State of California to cause cancer, birth defects or other reproductive harm.

What is the state of California Proposition 65?

Proposition 65 requires businesses to provide warnings to Californians about significant exposures to chemicals that cause cancer, birth defects or other reproductive harm. These chemicals can be in the products that Californians purchase, in their homes or workplaces, or that are released into the environment. By requiring that this information be provided, Proposition 65 enables Californians to make informed decisions about their exposures to these chemicals.

For more information go to: www.P65Warnings.ca.gov

The most recent list of chemicals known to the State of California can be seen at:

https://oehha.ca.gov/media/downloads/proposition-65//p65list102618.pdf

Affected Products: This applies to all existing and future products offered by Future Design Controls.

User's Manual FDC-9300 Process / Temperature Controller FUTUREDESIGN CONTROLS

FUTUREDESIGN CONTROLS

Future Design Controls
7524 West 98th Place, P.O. Box 1196
Bridgeview, IL. 60455 USA
888.751.5444 - Office
888.307.8014 - Fax
866.342.5332 - Technical Support
E-mail: csr@futuredesigncontrols.com
Website: http://futuredesigncontrols.com